Karlsruhe Institute of Technology

# Cryogenics

**H. Neumann**
to M. Süßer

- Low temperature measurement and control technique



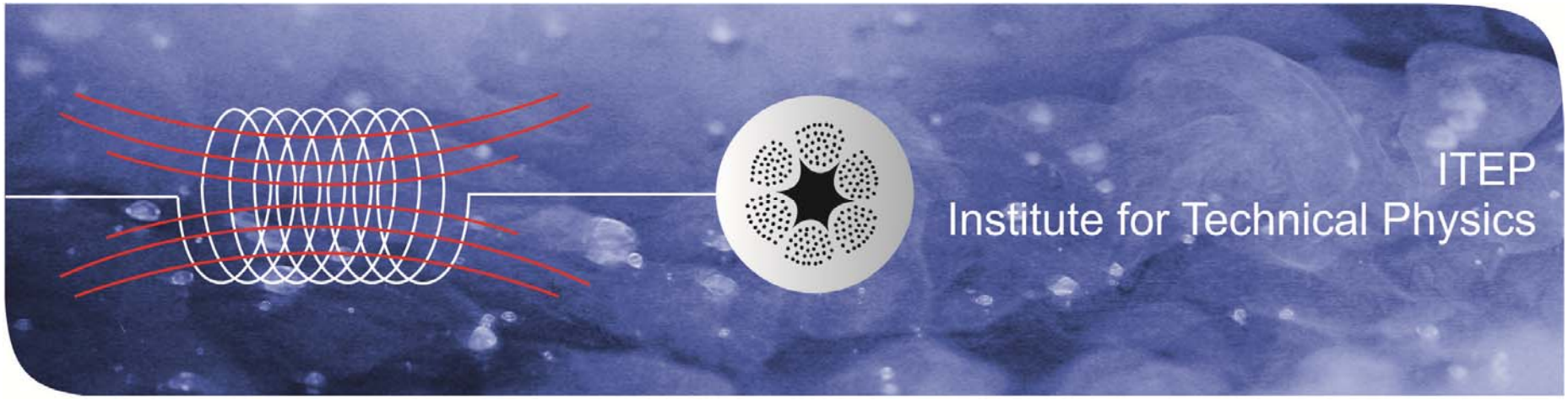

# Content

- Low temperature measurement
  - temperature scale ITS-90
  - calibration and fit interpolation
  - selection of low temperature sensors
  - TVO-sensor
  - Cernox-sensor
  - comparison TVO vs Cernox
  - Platinum-sensor
  - Silizium diodes (semiconductor)
  - Thermo couples
  - sensor selection
  - sensitivity-temperature resolution
  - two-wire versus four-wire-measurement
  - self heating and thermal boundary resistance
  - balancing the uncertainty due to self heating and voltage drop

# Content

- Low temperature measurement
  - thermal EMF (electromotiv force)
  - wiring for cryogenic instrumentation
  - thermal dumping – heat sink
  - electrical resistance in parallel – feed throughs
  - thermometer holder
  - comparison of joint conductance
  - sensor mounting – general rules
  - sensor mounting inside pipe
  - TVO sensor mounted on end of capillary
  - sensor mounting outside pipe
  - comparison between inside and outside mounting of sensor in pipes
  - influences on accuracy
  - general considerations of uncertainty

# Content

- Pressure / Differential Pressure Measurements
  - thermo acoustic oscillations (TAO´s)
  - differential pressure sensor
- Mass flow measurement
  - orifice
  - classical venturi tube ISO 5167- 4
  - V-cone
  - coriolis
  - comparison
- Level measurement
  - continuously
  - discrete
- Cryogenic valves
  - specification
  - valve characteristic
  - valve sizing coefficient

# Low temperature measurement

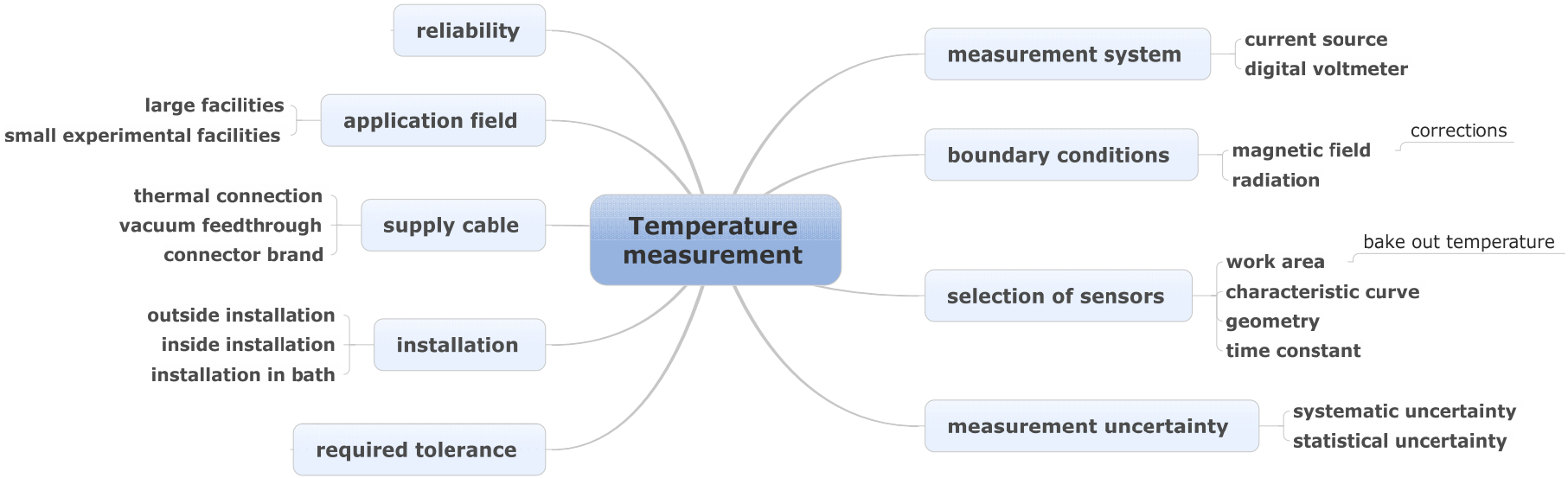

# Low temperature measurement –
## Temperature scale ITS-90

- the **I**nternational **T**emperature **S**cale was adopted 1990 by the International Committee of Weights and Measures
  - temperature range 0.65 – 1358 K
  - three constitutive elements:
    - a set of definitions or fixed points
    - a mathematical definition
    - an interpolating instrument

# Low temperature measurement –
## temperature scale ITS-90

- definition temperature $$1 \cdot K = \frac{T_{TP,water}}{273.16}$$

- ITS 90 defined by He vapour pressure and fix points
  - 0.65 K ≤ T ≤ 5 K: vapour pressure $^3$He and $^4$He
  - T = 13.8033 K: triple point hydrogen
  - T = 24.5561 K: triple point neon
  - T = 54.3584 K: triple point oxygen
  - T = 83.0858 K: triple point argon
  - T = 234.3156 K: triple point mercury
  - **T = 273.16 K: triple point water**
  - T = 302.9146 K: melting point gallium

- temperature scale is transferred from primary thermometers to secondary thermometers. Scale maintained by National Metrology Institute (NMI) such as NIST, NPL, PTB, IMGC
- the most common secondary thermometer is the high purity standard Platinum resistance thermometer (SPRT) or the Rhodium-Iron resistance thermometer (RIRT)

# Low temperature measurement – temperature scale ITS-90

- reference temperature: triple point of water

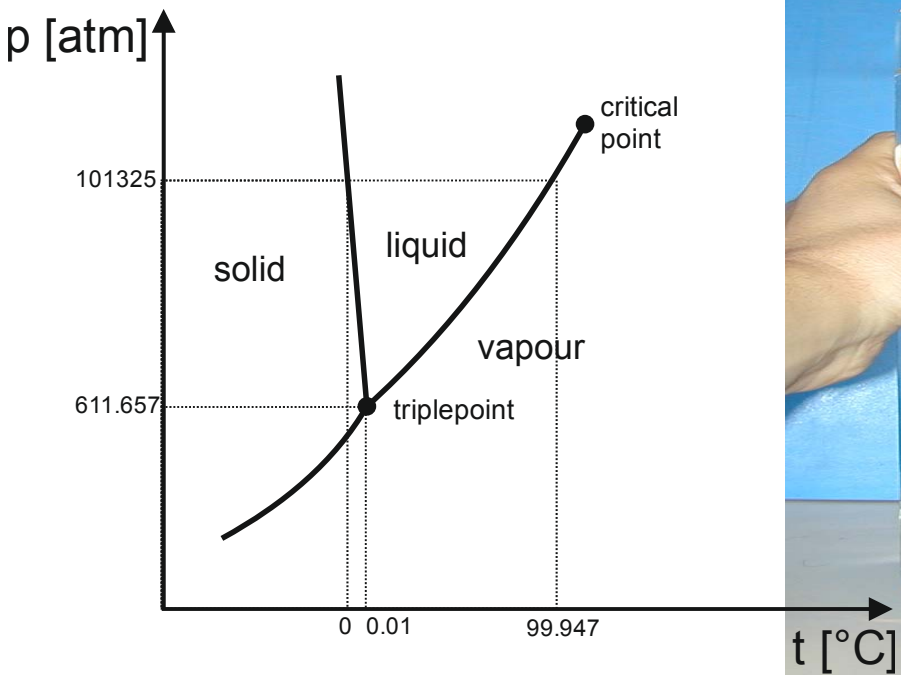


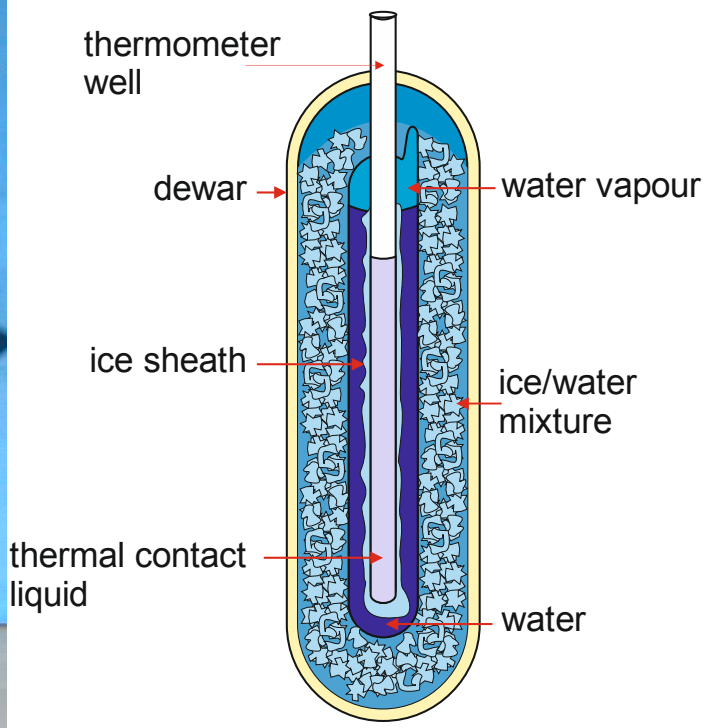

# Low temperature measurement –
## Calibration and Fit Interpolation

- commercially calibrated sensors should have calibrations traceable to international standards

- **calibration uncertainty typically increases by a factor of 5 to 10 between the successive levels**

- an interpolation method is required for temperatures between calibration points. Typically the uncertainties introduced by the interpolation function are in the order of 1/10 of the calibration uncertainty

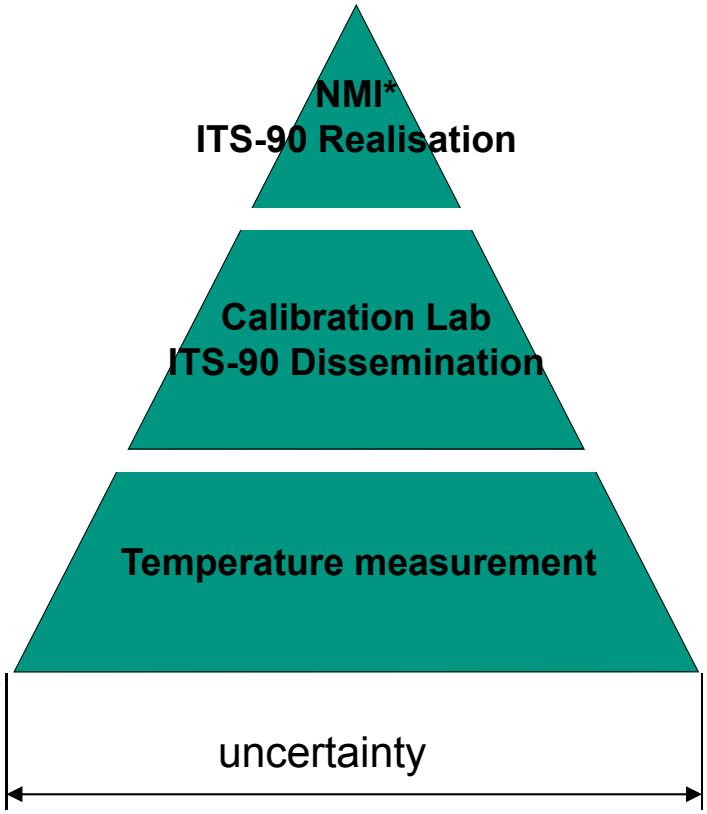


*National Metrology Institute (NMI)

# Low temperature measurement –
## Calibration and Fit Interpolation

- primary sensors
  - based on understood physics: ideal gas thermometer, vapor pressure thermometer, fix points
  - but: impractical - only calibration laboratories
- secondary sensors
  - needs to be calibrated from some primary standard sensors: interpolating thermometers - standard-Platin-sensor (Pt25) rhodium-iron-sensor (RhFe)
- working standard
  - interpolating thermometers: resistive thermometers, diodes, thermocouples

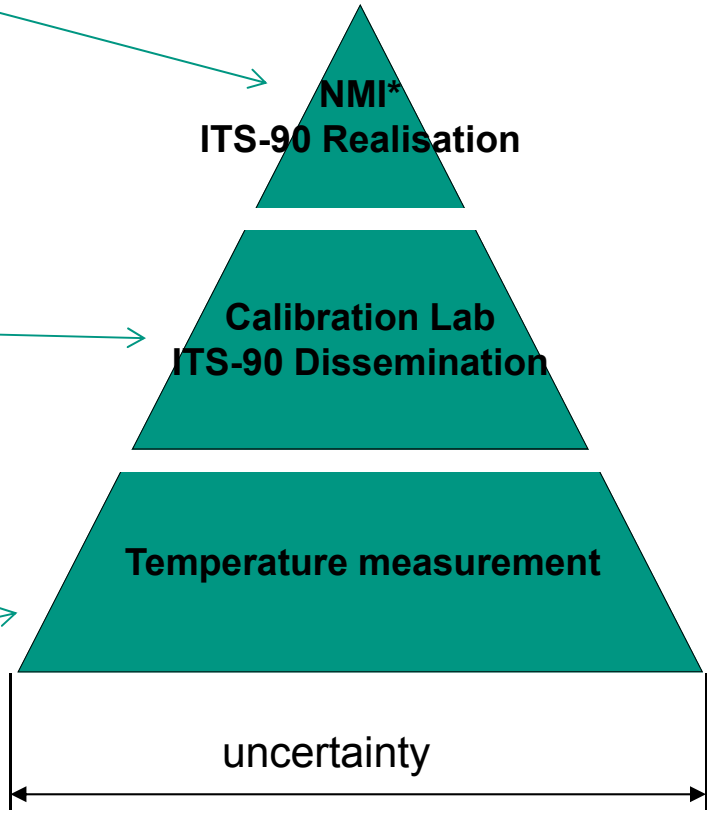


*National Metrology Institute (NMI)

# Low temperature measurement – selection of low temperature sensors

- resistors
  - resistors with negative temperature coefficient (NTC-sensors – semiconductors)
    - carbon-glass resistor (CGR)
    - cernox (CX)
    - carbon (Allen Bradley)
    - germanium (Ge)
    - carbon compound (TVO)
  - resistors with positvie temperature coefficient (PTC-sensors – metal)
    - platinum (Pt)
    - rhodium-iron (RhFe)
- diodes
  - Si-diodes
  - GaAlAs-diodes
- Other
  - thermocouples
  - CLTS (Cryogenic Linear Temperature Sensor)
  - capacity thermometers

# Low temperature measurement –
## selection of low temperature sensors

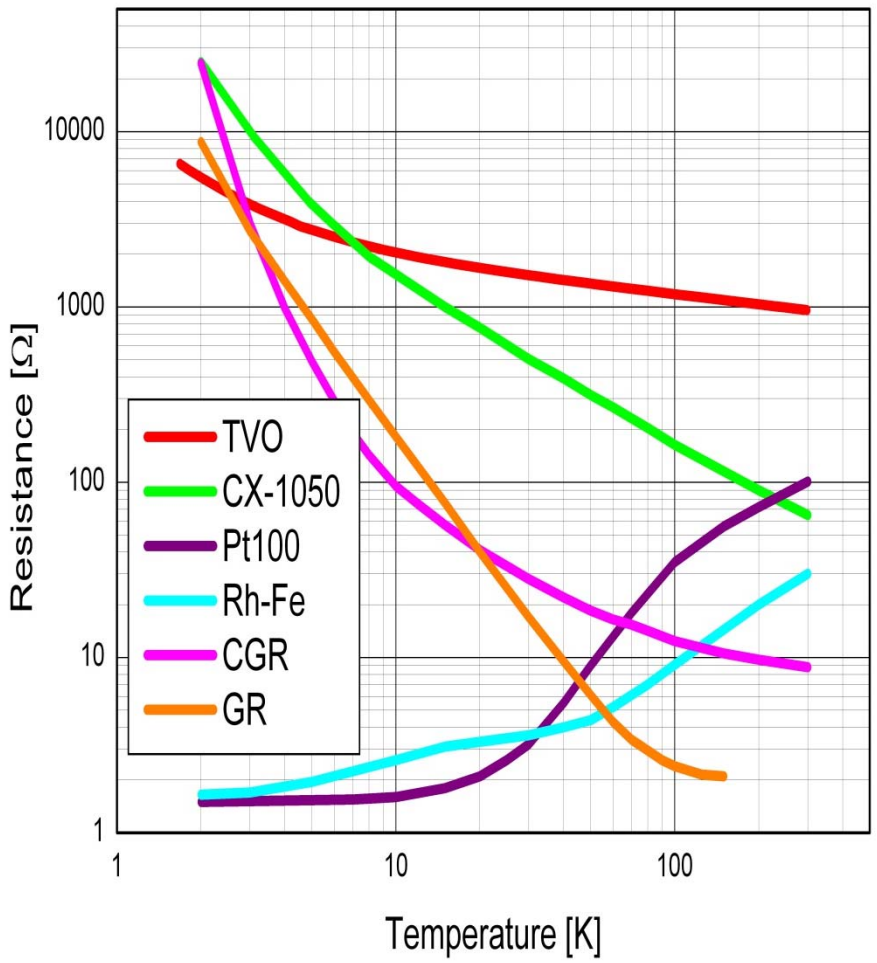


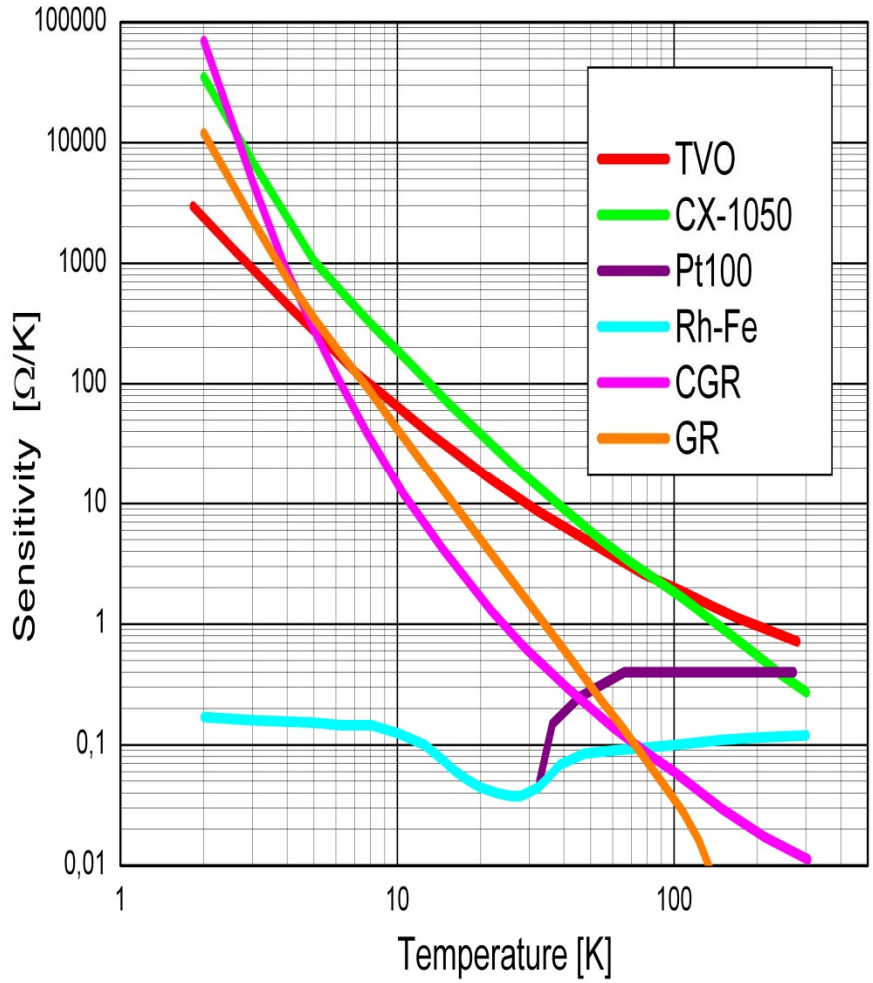

# Low temperature measurement –
## TVO-sensor

- carbon - $Al_2O_3$ Compound
- strong electrical leads
- weak point on the connection to the sensing element
- sensitive against bending and local pressure
- individual calibration necessary
- undefined geometrical shape
- calibration after potting necessary
- temperature range 2 – 370 K

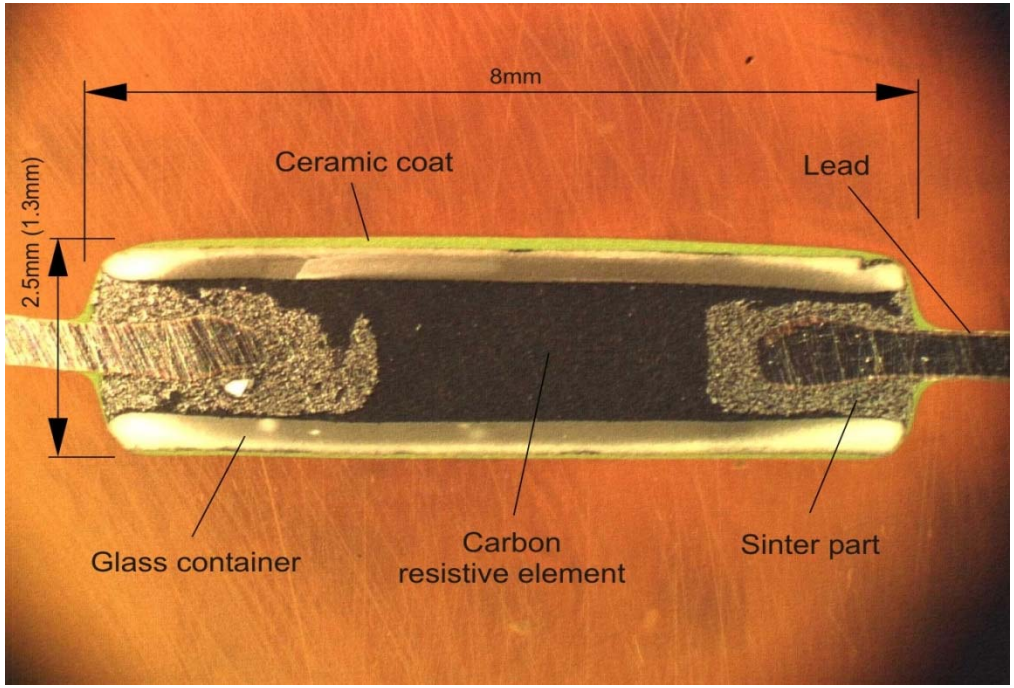


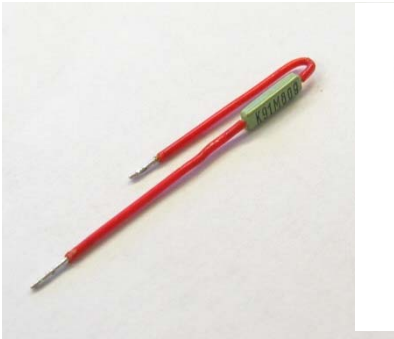

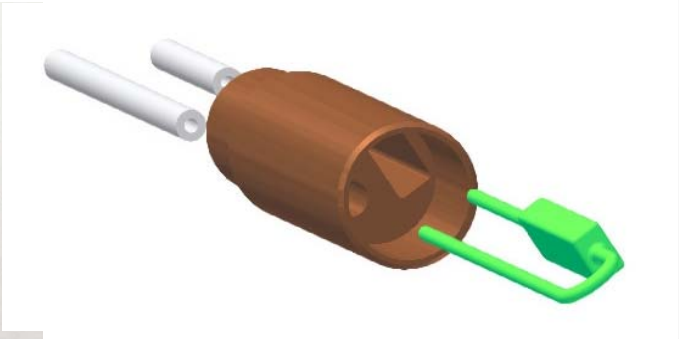

# Low temperature measurement –
## Cernox-sensor (CX)

- Zirconium sensing element on a sapphire substrate
- CX-AA
  - sensor element protected by means of copper canister
  - internal atmosphere: He
  - internal wiring: 50.8 µm diameter gold wires
- CX-SD
  - flat square shaped packages
  - internal atmosphere: vacuum
- CX-BR
  - bare sensor
- very sensitive against overload
- individual calibration necessary
- T-range: 0.1 – 420 K

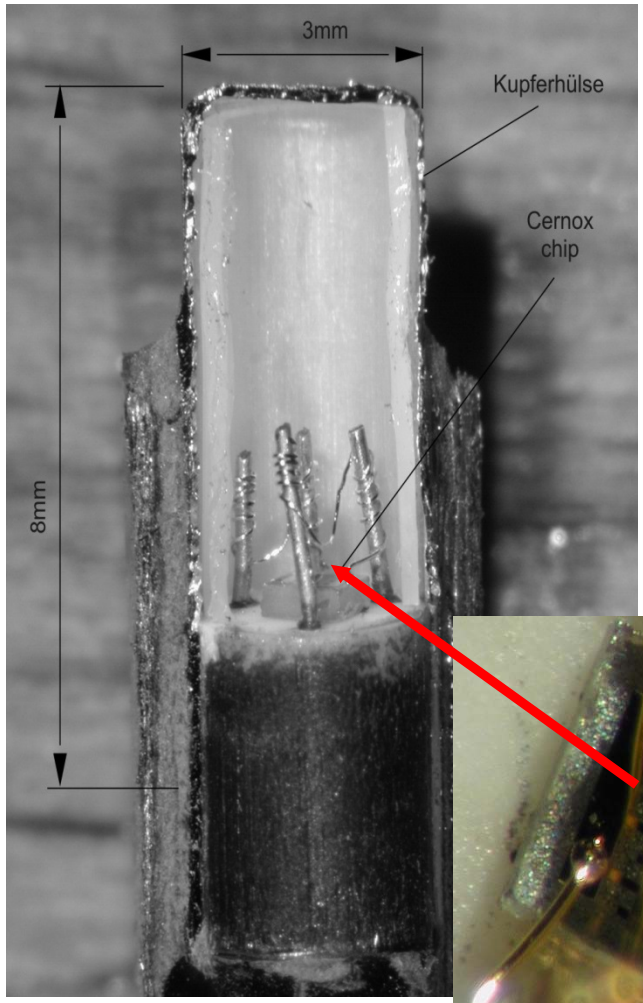


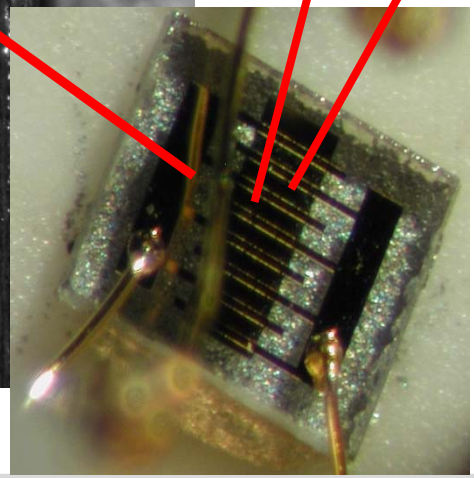

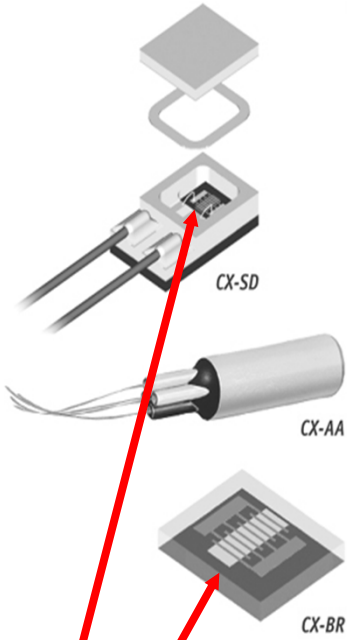

# Low temperature measurement – comparison TVO vs Cernox

**Resistance characteristic curve**
**R = f (T)**

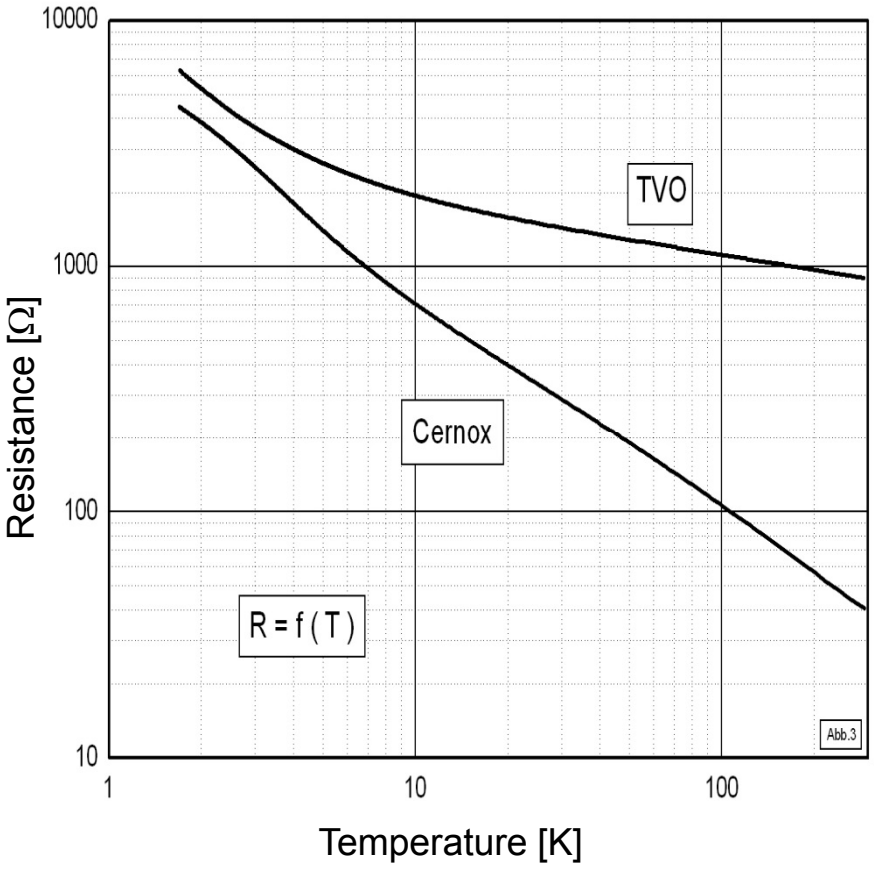


**Sensitivity characteristic curve**
**S = (dR / dT)  S = f (T)**

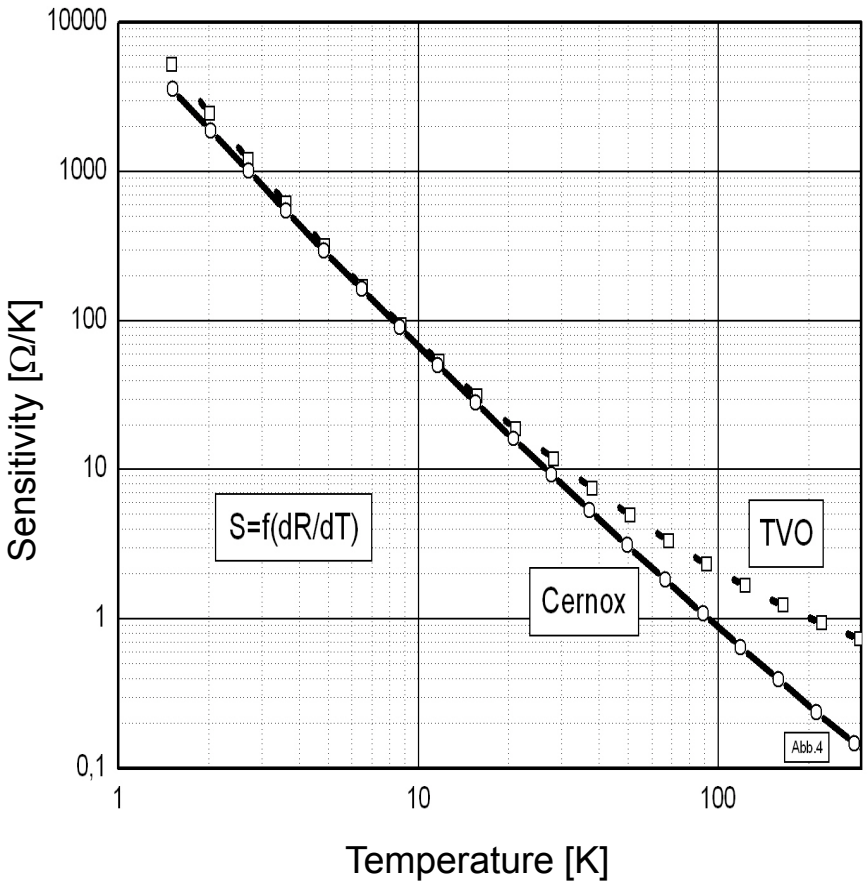

# Low temperature measurement – comparison TVO vs Cernox

- sensitivity to magnetic field

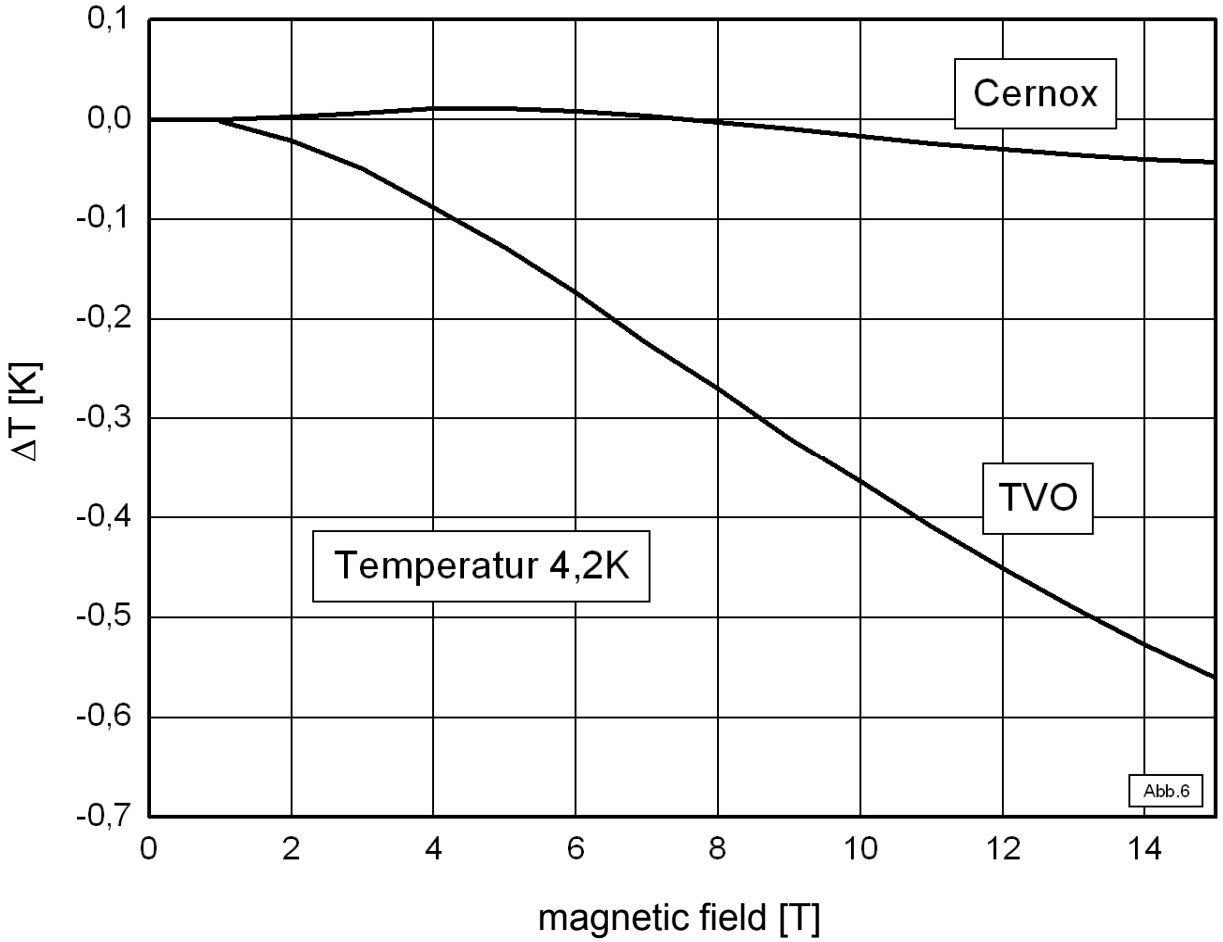

# Low temperature measurement – comparison TVO vs Cernox

- temperature resolution

$$\Delta T = (\Delta U/U)T / S_d$$

$\Delta T$: temperature resolution

$\Delta U$: resolution voltmeter (quality of voltmeter)

U: voltage drop at sensor ($U = I \cdot R$)

T: temperature

$S_d$ : dimensionless sensitivity

$S_d = T/R \cdot (dR / dT)$

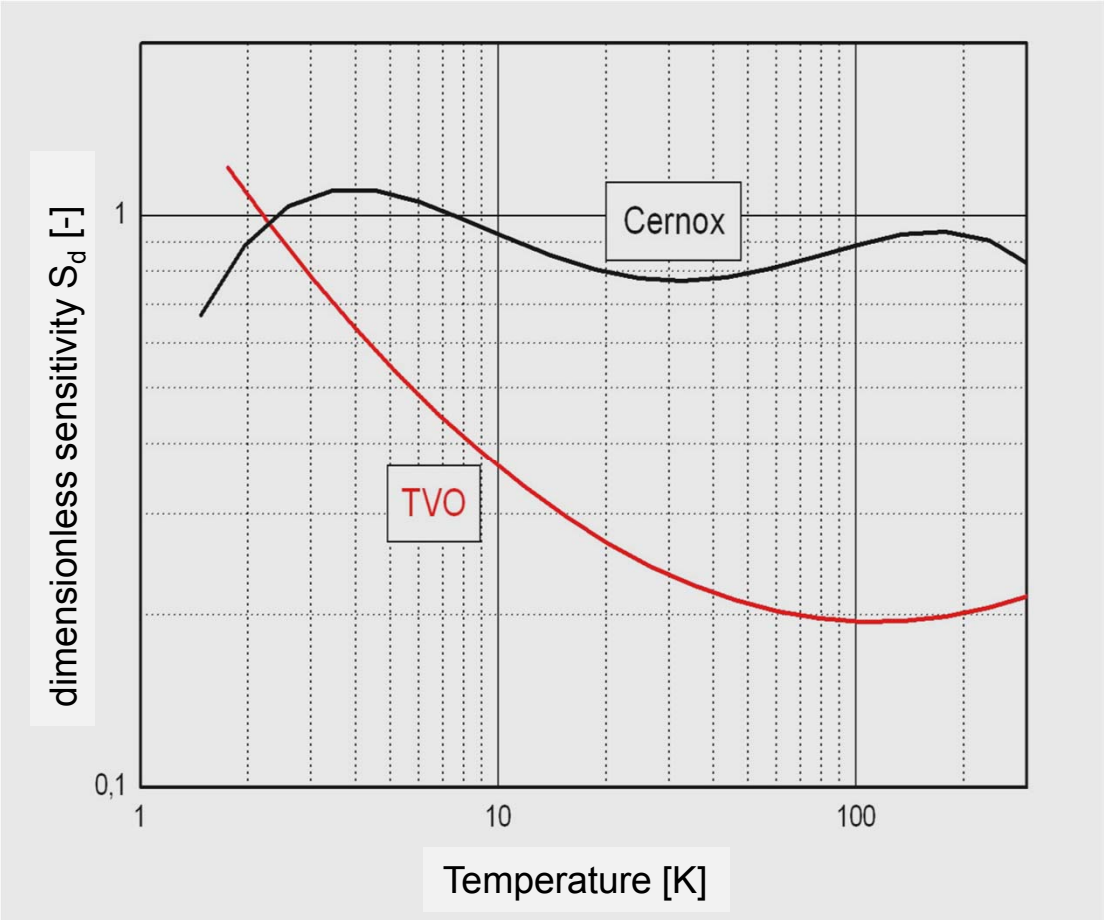

# Low temperature measurement – comparison TVO vs Cernox

- assumption: digital voltmeter – resolution: 10µV

**TVO**

| temperature [ K ] | resistance [ Ω ] | feeding current [ µA ] | voltage drop at sensor [ mV ] | $S_d$ | ΔT [ K ] |
|---|---|---|---|---|---|
| 4 | 3000 | **10** | 30 | 0.6 | **0.002** |
| 100 | 1200 | **10** | 12 | 0.2 | **0.1** |
| 300 | 1000 | **10** | 10 | 0.2 | **1.5** |

**Cernox**

| temperature [ K ] | resistance [ Ω ] | feeding current [ µA ] | voltage drop at sensor [ mV ] | $S_d$ | ΔT [ K ] |
|---|---|---|---|---|---|
| 4 | 3000 | **10** | 30 | 1 | **0.002** |
| 100 | 100 | **20** | 2 | 1 | **0.5** |
| 300 | 50 | **50** | 2.5 | 1 | **1.2** |

# Low temperature measurement – platinum-sensor (Pt)

Glas wire wound

Ceramic wire wound

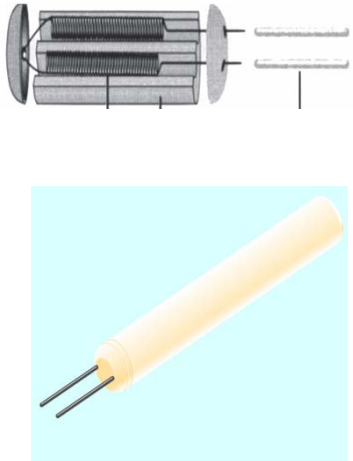

Thermal ribbons

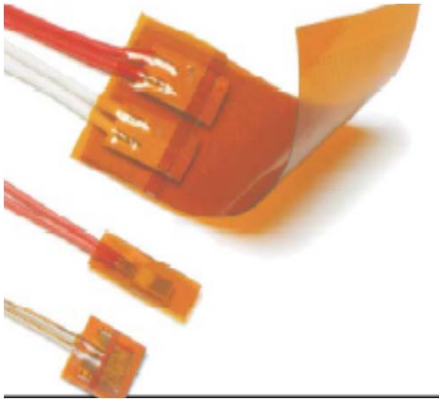

Thin film

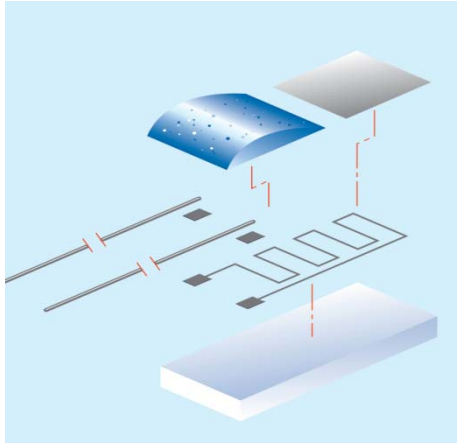

- Pt100 sensors are industry standard
- available with different resistance at 273 K: **Pt100**, Pt500, Pt1000, Pt10000
- electrical characteristics follow an industry standard curve from 73 K to 873 K with good sensitivity over this range
- Pt-sensors can also be used down to 20 K
- inexpensive and require simple instrumentation

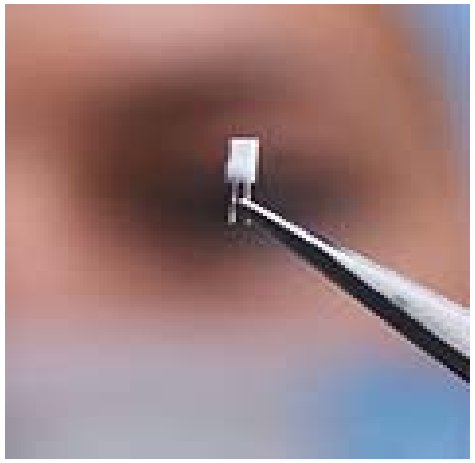

# Low temperature measurement –
## silizium diodes (semiconductors)

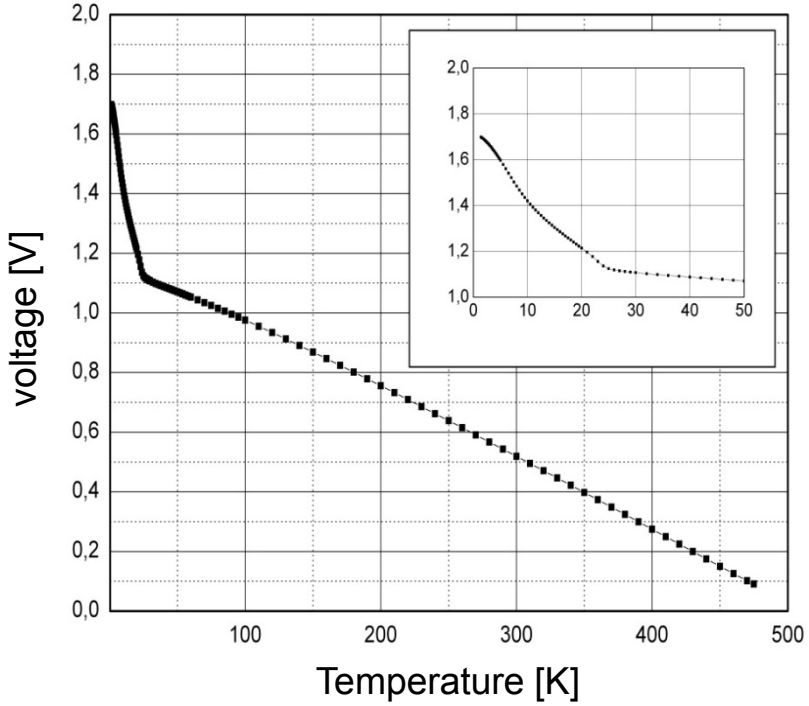


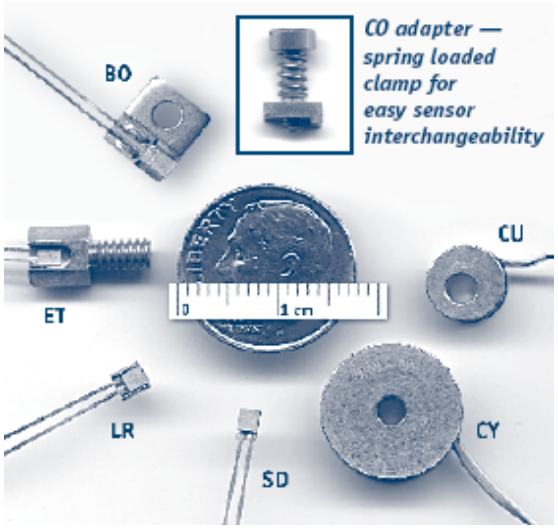


Temperature range 1 – 500 K

**Good choice for general-purpose cryogenic use**, temperatures depend forward bias fast response, **constant current (10 µA),** high sensitive against magnetic fields, **interchangeable** (they follow a standard curve), **available in robust mounting packages and probes**, **high self heating effect**, voltage across the diodes can be measured only in forward direction, less accurate also the long time stability, AC-noise-induced temperature can be prevalent in diodes

**Silicon diodes are easy and inexpensive to instrument, high sensitivity over limited range**

# Low temperature measurement – thermo couples

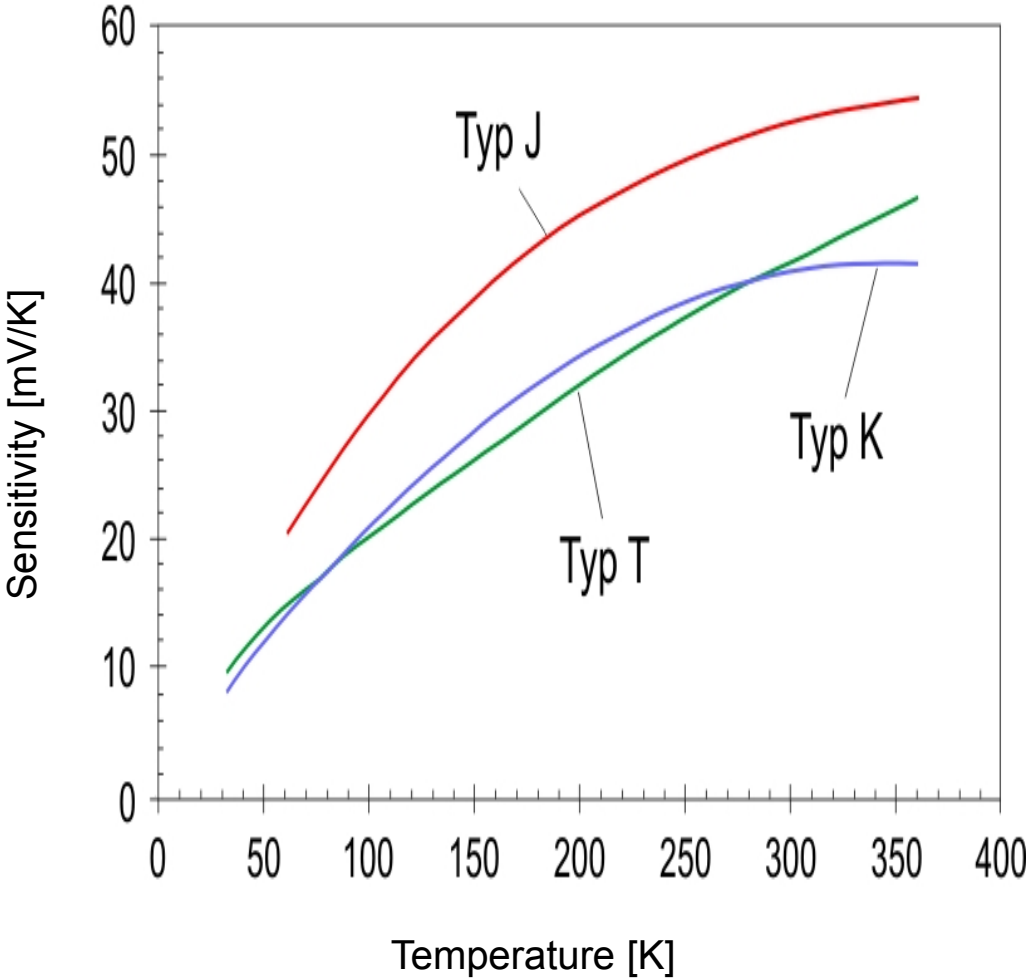


useful for low mass or differential temperature measurement

in-situ calibration necessary otherwise errors in the range 5 – 10 K occur

no self heating

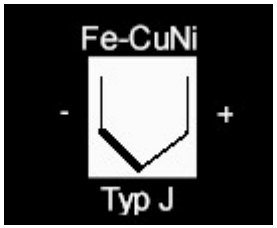


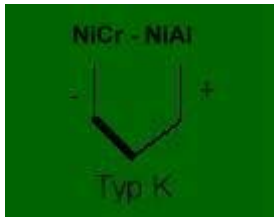


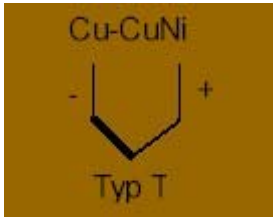

# Low temperature measurement – sensor selection

- quality of measurement
  - repeatability, resolution, sensitivity, uncertainty
- experimental design
  - related to the experiment and boundary conditions: physical size, temperature range, thermal response time, power dissipation
- environmental constrains
  - effects due to external conditions: magnetic field, vibration, mechanical impacts, vacuum, ionizing radiation
- utility requirements
  - costs, required expertise

# Low temperature measurement – sensor selection

- remarks to environmental constrains
  - suitability in magnetic fields
    - magnetic fields can cause reversible calibration shifts
    - Cernox sensors are the first choice, diodes also Pt and RhFe have big shifts
  - suitability in ionizing radiation areas
    - radiation can produce temporary or permanent calibration shifts
  - suitability under vacuum conditions
    - bake out procedure performed in most high vacuum systems can be damaging the materials used in the construction, even the sensor withstands the bakeout temperature, the calibration may shift
  - some materials in the sensor for example Stycast at CX AA-Package get a leakage and may interfere with the high vacuum by acting as a virtual leak
  - Pt or RhFe sensors are recommended sensors for high baking temperatures

# Low temperature measurement – sensor selection

- range of use
  - limited by three typical factors
    - the **sensitivity** must occur on a measurable level appropriate to the temperature range of use
    - materials like epoxy, solders insulators are useful at low temperatures but can break at higher temperatures
    - high temperatures can induce strain in the sensor due to changes in packaging materials or in the leads – resulting strain can cause a shift in the low temperature region
    - **insulation of wiring** must also be suitable for the temperature range

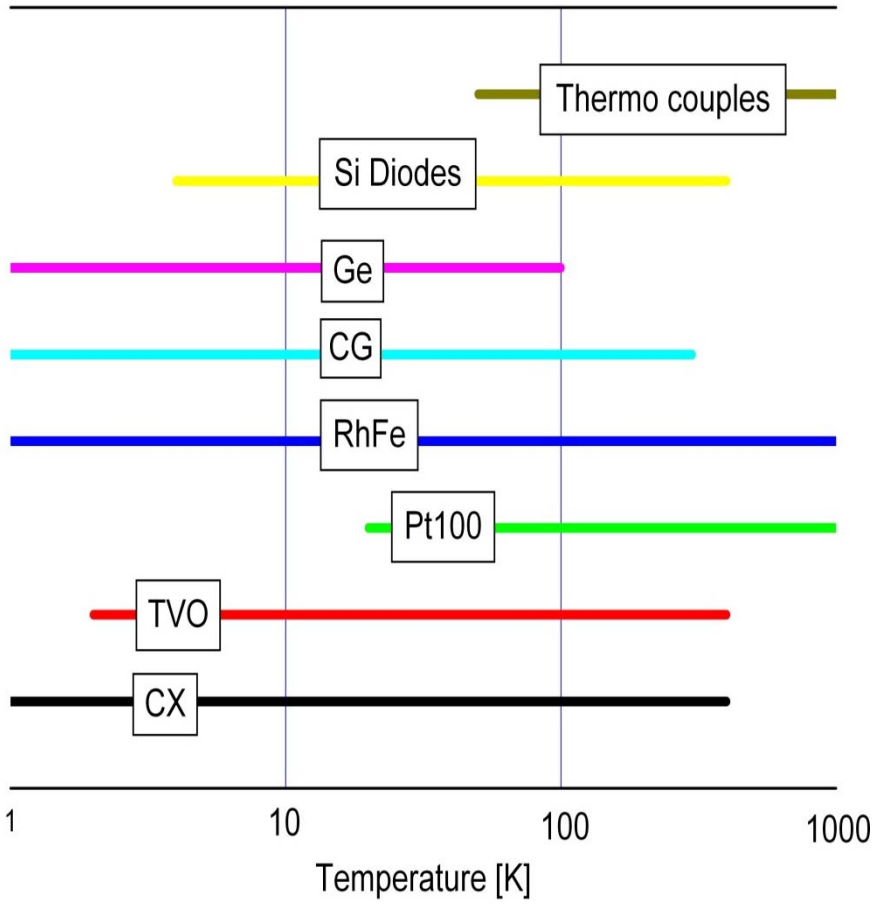

# Low temperature measurement –
## sensitivity-temperature resolution

Sensitivity S is a quality of the sensor and a very strong function of temperature

resistors sensitivities $S_R = \frac{dR}{dT} = \left\{0.1 \cdot \frac{\Omega}{K} - 10{,}000 \cdot \frac{\Omega}{K}\right\}$

diodes sensitivities $S_V = \frac{dV}{dT} = \left\{2 \cdot \frac{mV}{K} - 180 \cdot \frac{mV}{K}\right\}$

dimensionless sensitivity (material specific parameter): $S_d = \frac{T}{R} \cdot \frac{dR}{dT} = \frac{T}{R} \cdot S_R$

temperature resolution: $\Delta T = \frac{\Delta U}{U} \cdot \frac{T}{S_d}$

with: $\Delta$U: resolution voltmeter; U: voltage drop on sensor, U = I·R;
T: temperature of operation

# Low temperature measurement –
## two-wire versus four-wire-measurement

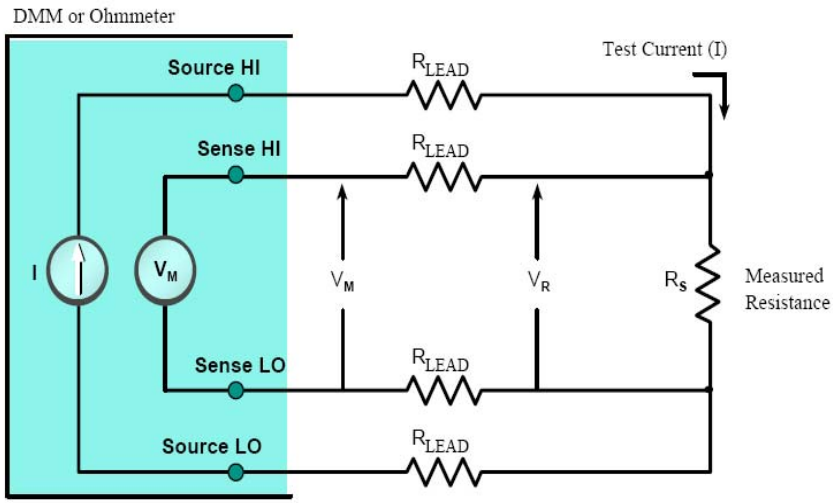


$V_M$ = Voltage measured by meter
$V_R$ = Voltage across resistor
Because sense current is negligible, $V_M = V_R$

and measured resistance = $\frac{V_M}{I} = \frac{V_R}{I}$

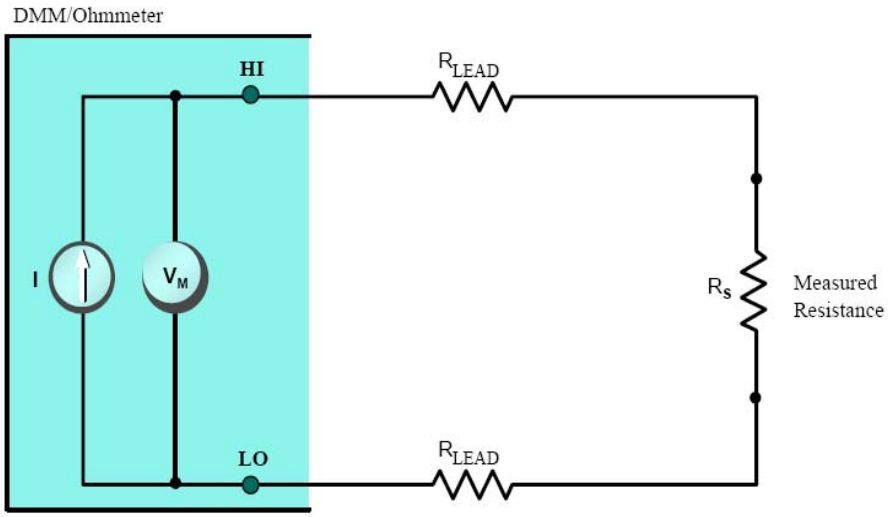


$$R_{measured} = R_S + R_{LEAD} + R_{LEAD}$$

**four - wire - measurement: the voltage sense located across the resistor - only the resistance of the sensor is measured and not the lead resistance**

# Low temperature measurement – lead resistance

example $R_L$ = 10 Ω (5 Ω each lead)
Error due to resistance: $\Delta T_L = R_L / S$ (2-lead configuration)

| sensor | T [K] | S [Ω/K] | $\Delta T = R_L / S$ [K] |
|---|---|---|---|
| TVO | 300 | 1 | 10/1 = 10 |
| TVO | 4 | 600 | 10/600 = 0.02 |
| CX | 300 | 0.11 | 10/0.11 = 91 |
| CX | 4 | 1000 | 10/1000 = 0.01 |
| Pt 100 | 70 - 300 | 0.4 | 10/0.4 = 25 |
| Pt 500 | 70 - 300 | 2 | 10/2 = 5 |
| RhFe | 4 - 300 | 0.1 | 10/0.1 = 100 |

**SI-diode temperature sensors:**

T < 30 K: S ≈ 26 mV/K ⇒ ΔT ≈ 40 mK (SI current: I = 10µA; ΔT = R·I/S)

T > 30 K: S ≈ 2.3 mV/K ⇒ ΔT ≈ 430 mK

**Unless the lead resistance can be reduced in magnitude or the resultant error, a 4-lead measurement is recommended**

# Low temperature measurement –
## self heating and thermal boundary resistance

Heat conduction wiring

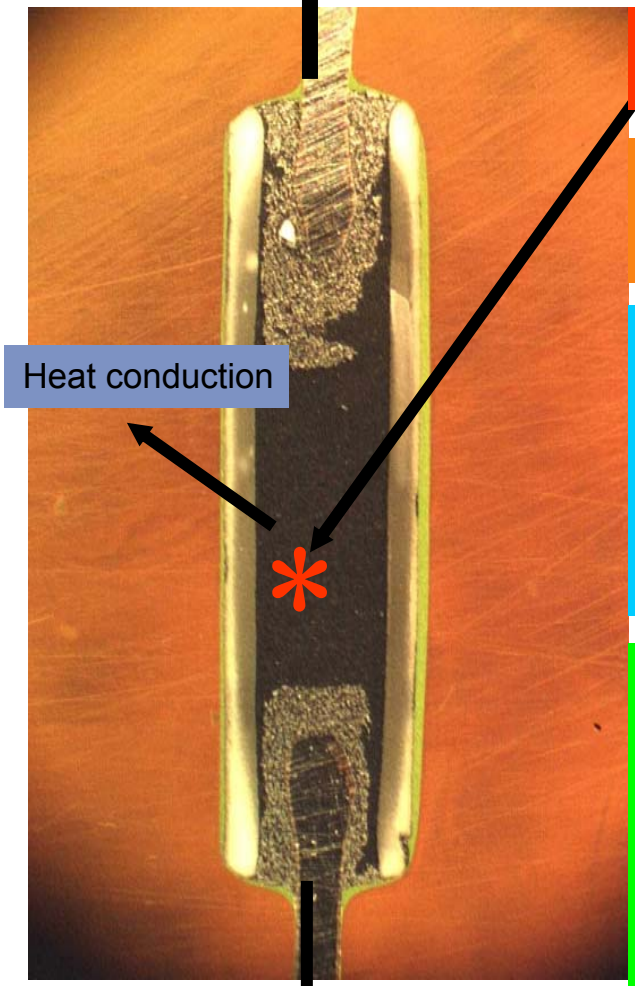

Heat conduction

**Energie input**
$P_S = I^2 \cdot R_S$

External heat source in case of insufficient thermal dumping of the leads

**Energy transfer due to heat transmission**
$P_t = k \cdot A \cdot \Delta T$

**$R_t$ : thermal resistance**
$R_t = (k \cdot A)^{-1}$
$P_t = \Delta T / R_t$

$$P_S = P_t$$

$$I^2 \cdot R_S = \Delta T / R_t$$

$$\Delta T = I^2 \cdot R_S \cdot R_t$$

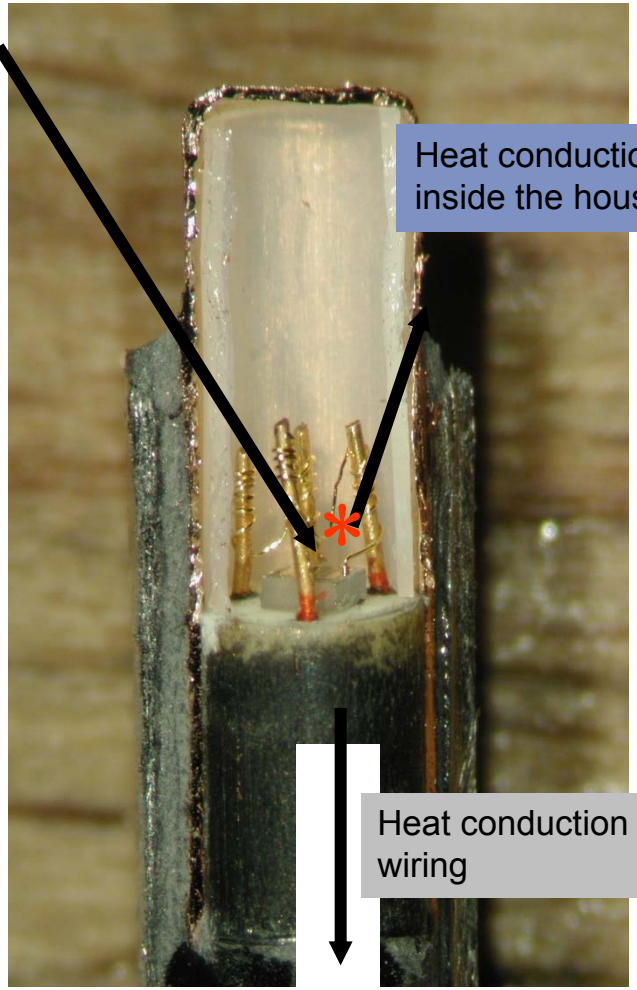

Heat conduction inside the housing

Heat conduction wiring

# Low temperature measurement –
## self heating and thermal boundary resistance

Self heating – example

Cernox at 4 K

$I = 10\ \mu A$, $R_S = 3000\ \Omega$,

$\Rightarrow\ P_S = 0.30\ \mu W$

with $R_{t\ \mathrm{Cernox\ 4K}} = 5\ \mathrm{mK}/\mu W$

$$\Delta T = P_S \cdot R_t = I^2 \cdot R_S \cdot R_t$$

$\Rightarrow \Delta T = 1.5\ \mathrm{mK}$

TVO at 4 K

$I = 10\ \mu A$, $R_S = 3000\ \Omega$,

$\Rightarrow\ P_S = 0.30\ \mu W$

with $R_{t\ \mathrm{TVO\ 4K}} = 1\ \mathrm{mK}/\mu W$

$\Rightarrow \Delta T = 0.3\ \mathrm{mK}$

Si diode at 4 K

$I = 10\ \mu A$, $U_S = 2\ V$,

$\Rightarrow\ P_S = 20\ \mu W$

with $R_{t\ \mathrm{Si\ 4K}} = 5\ \mathrm{mK}/\mu W$

$\Rightarrow \Delta T = 100\ \mathrm{mK}$

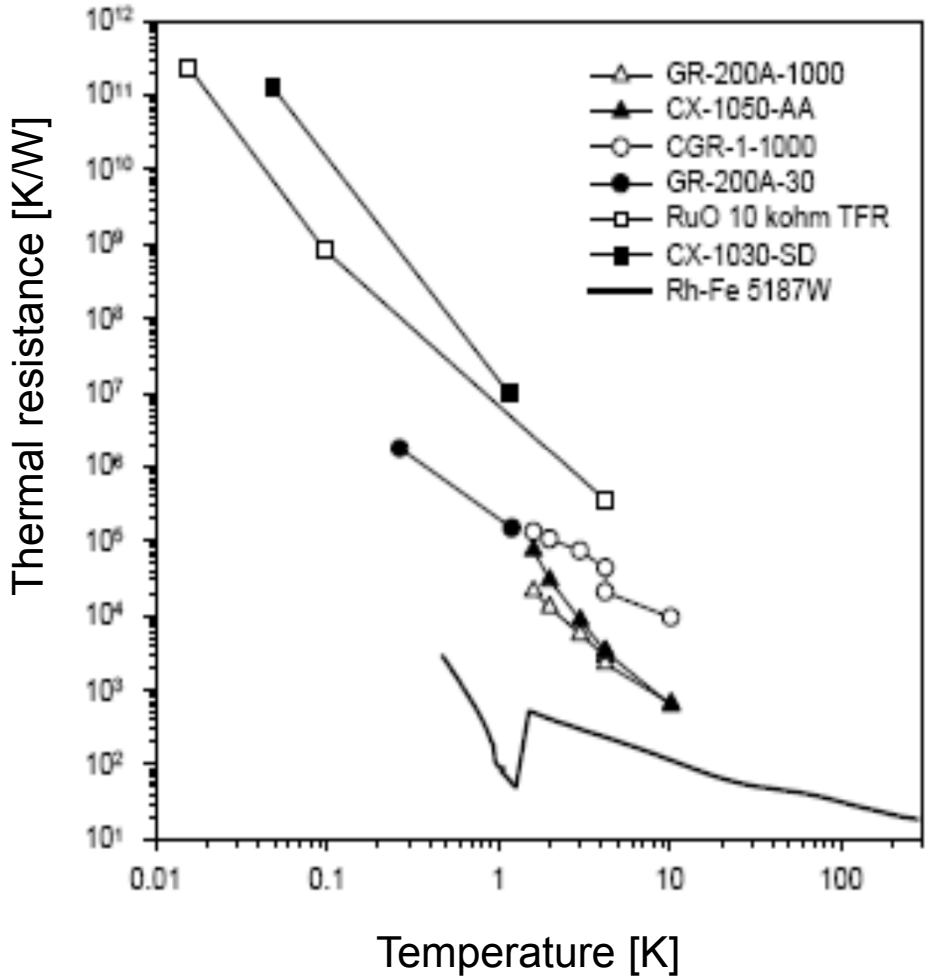


[1]

# Low temperature measurement – balancing the uncertainty due to self heating and voltage drop

- increasing excitation current indicates:
  - increasing uncertainty due to self heating
  - higher resolution of the voltage signal
  - improvement of signal / noise ratio

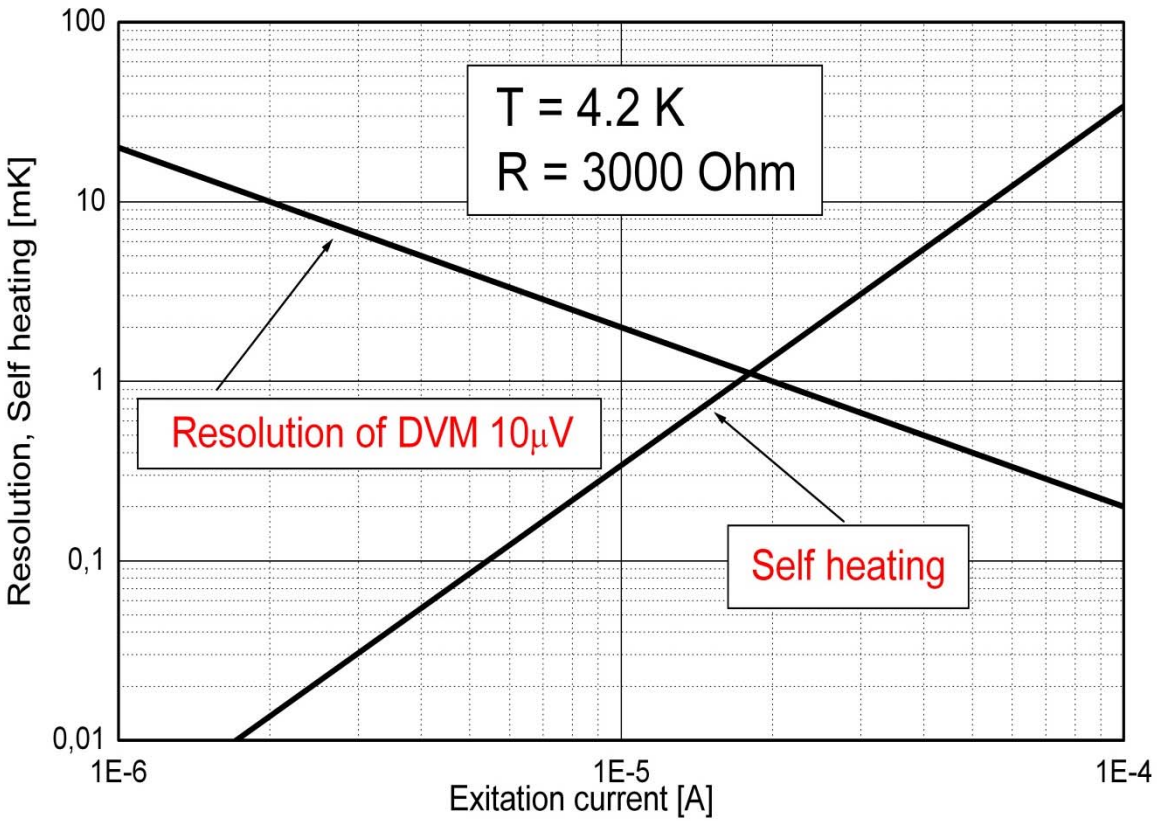


Balancing self heating - the voltage drop for TVO sensor

# Low temperature measurement – thermal EMF (electromotiv force)

SEEBECK coefficient of different materials in region of ΔT

produces a thermal emf, even if no current is flowing

solution: reversing polarity only for resistive sensors - diodes do not allow current reversal

$$U_1 = I \cdot R + U_{emf}$$
$$U_2 = I \cdot R - U_{emf}$$
$$R = (U_1 + U_2) / (2 \cdot I)$$

Example:: $U_{EMF}$ = 10 µV

Error caused due EMF $\Delta T_{EMF} = U_{EMF} / (dU/dT)$ S: Sensitivity $(dU/dT) = S \cdot i$ i: Excitation current

| | | | | | |
|---|---|---|---|---|---|
| TVO 300 K | I = 10 µA | S = 1 Ω/K | (dU/dT) = 1 x 10 = 10 µV/K | $\Delta T_{EMF}$ = 10/10 | = 1 K |
| TVO 4 K | I = 10 µA | S = 600 Ω/K | (dU/dT) = 600 x 10 = 6 mV/K | $\Delta T_{EMF}$ = 10/6000 | = 0.0015 K |
| CX 300K | I = 10 µA | S = 0.1 Ω/K | (dU/dT) = 0.1 x 10 = 1 µV/K | $\Delta T_{EMF}$ = 10/1 | = 10 K |
| CX 4K | I = 10 µA | S = 1000 Ω/K | (dU/dT) = 1000 x 10 = 10 mV/K | $\Delta T_{EMF}$ = 10/10000 | = 0.001 K |
| Pt100 300K | I = 1 mA | S = 0.4 Ω/K | (dU/dT) = 0.4 x 1 = 0.4 mV/K | $\Delta T_{EMF}$ = 10/400 | = 0.025 K |
| Pt100 70K | I = 3 mA | S = 0.4 Ω/K | (dU/dT) = 0.4 x 3 = 1.2 mV/K | $\Delta T_{EMF}$ = 10/1200 | = 0.008 K |
| RhFe 300K | I = 1 mA | S = 0.1 Ω/K | (dU/dT) = 0.1 x 1= 0.1 mV/K | $\Delta T_{EMF}$ = 10/100 | = 0.10 K |
| RhFe 4K | I = 3 mA | S = 0.1 Ω/K | (dU/dT) = 0.1 x 3= 0.3 mV/K | $\Delta T_{EMF}$ = 10/300 | = 0.03 K |
| Si Diode 300K | I = 10 µA | | (dU/dT) = 3 mV/K | $\Delta T_{EMF}$ = 10/3000 | = 0.003 K |
| Si Diode 4K | I = 10 µA | | (dU/dT) = 30 mV/K | $\Delta T_{EMF}$ = 10/30000 | = 0.0003 K |

Thermoelectic voltage coefficient with respect to copper

| Metal | µV/K |
|---|---|
| Copper | <0.3 |
| Constantan (copper-nickel) | 40 |
| Gold | 0.5 |
| Silver | 0.5 |
| Brass | 3 |
| Beryllium Copper | 5 |
| Aluminum | 5 |
| Kovar or Alloy 42 | 40 |
| Silicon | 500 |
| Copper-Oxide | 1000 |
| Cadmium-Tin Solder | 0.2 |
| Tin-Lead Solder | 5 |

# Low temperature measurement – wiring for cryogenic instrumentation

- low thermal conductivity wiring to minimize heat load from higher temperature surroundings
- heat sinks leads as appropriate - minimize heat from higher temperature surroundings
- low thermal EMF materials (Keithley handbook on Low Level Measurements)
- twisted pairs for wiring for the reduction of AC-noise

# Low temperature measurement – wiring for cryogenic instrumentation

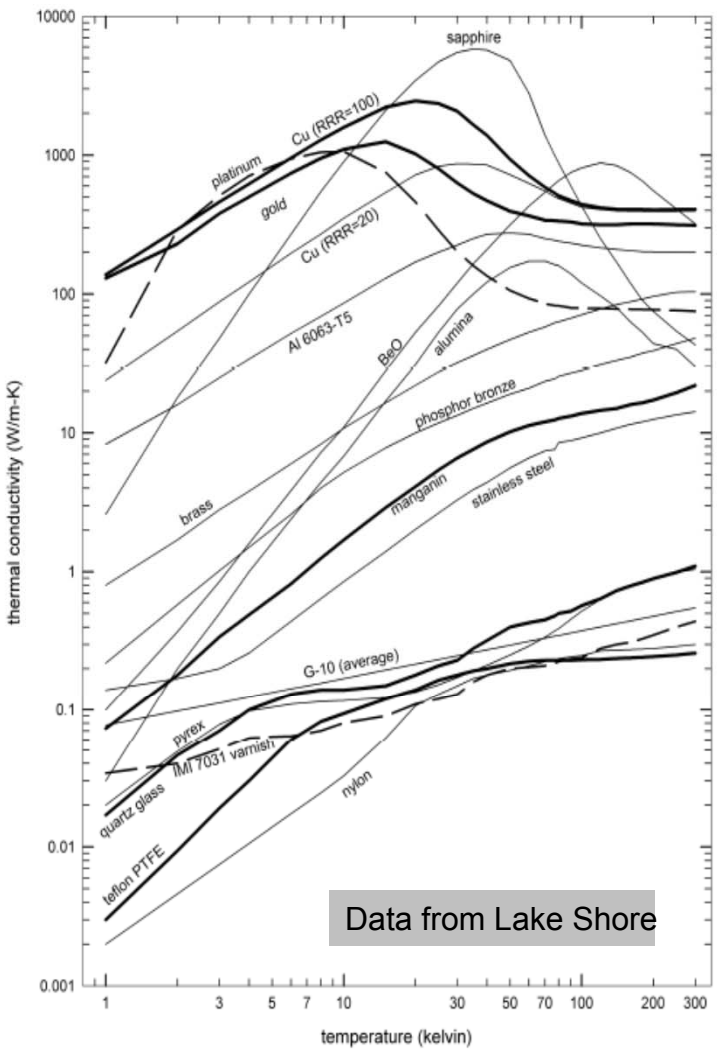


| Material Properties | | Phosphor bronze | Copper | Nichrome | Manganin |
|---|---|---|---|---|---|
| Melting range | | 1223 K to 1323 K | 1356 K | 1673 K | 1293 K |
| Coefficient of thermal expansion | | $1.78 \times 10^{-5}$ | $20 \times 10^{-6}$ | — | $19 \times 10^{-6}$ |
| Chemical composition (nominal) | | 94.8% copper, 5% tin, 0.2% phosphorus | — | 80% nickel, 20% chromium | 83% copper, 13% manganese, 4% nickel |
| Electrical resistivity (at 293 K) | | 11 $\mu\Omega$·cm | 1.7 $\mu\Omega$·cm | 120 $\mu\Omega$·cm | 48 $\mu\Omega$·cm |
| Thermal conductivity (W/(m·K)) | 0.1 K | NA | 9 | NA | 0.006 |
| | 0.4 K | NA | 30 | NA | 0.02 |
| | 1 K | 0.22 | 70 | NA | 0.06 |
| | 4 K | 1.6 | 300 | [illegible] | 0.5 |
| | 10 K | 4.6 | 700 | 0.7 | 2 |
| | 20 K | 10 | [illegible] | 2.6 | 3.3 |
| | 80 K | 25 | 600 | 8 | 13 |
| | 150 K | 34 | 410 | 9.5 | 16 |
| | 300 K | 48 | 400 | 12 | 22 |

Data from Lake Shore

**Wiedeman-Franz law** relates the thermal conductivity of a wire to its electrical conductivity and solutions using resistance wire or a good electrical conductor such as copper or silver to give a impedance for low self heating, will give similar passive heat leaks

Cryogenic wire is different from normal wire due to its **low thermal conductivity and high electrical resistivity**. Most common types are phosphor bronze and manganin but also copper wire are used

# Low temperature measurement – wiring for cryogenic instrumentation

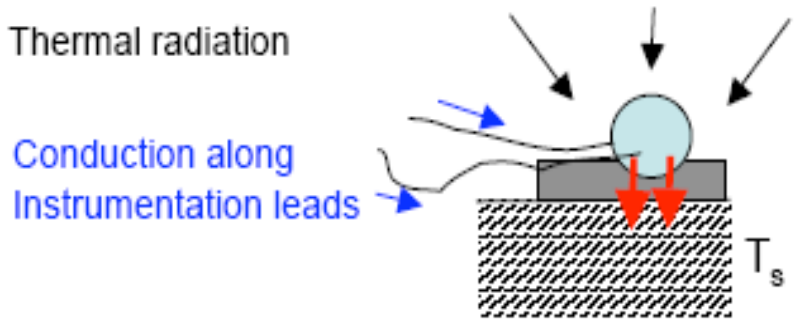


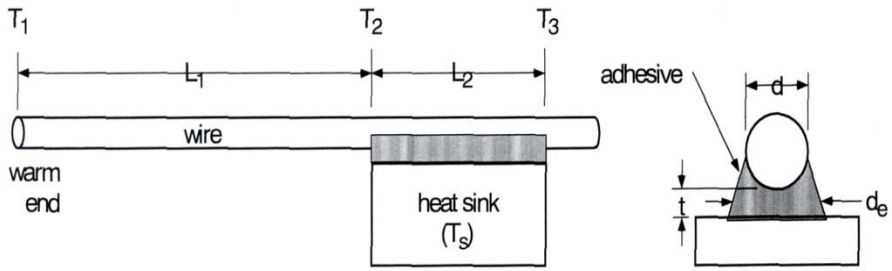


Table 1 – Wire Heat-Sinking Length Required to Thermally Anchor to a Heat Sink at Temperature T to Bring the Temperature of the Wire to Within 1 mK of $T_{lower}$

| | | | Heat-sinking length (mm) for wire sizes | | | |
|---|---|---|---|---|---|---|
| | $T_{upper}$ (K) | $T_{lower}$ (K) | 0.21 mm² (24 AWG) | 0.032 mm² (32 AWG) | 0.013 mm² (36 AWG) | 0.005 mm² (40 AWG) |
| Copper | 300 | 80 | 160 | 57 | 33 | 19 |
| | 300 | 4 | 688 | 233 | 138 | 80 |
| Phosphor bronze | 300 | 80 | 32 | 11 | 6 | 4 |
| | 300 | 4 | 38 | 13 | 7 | 4 |
| Manganin | 300 | 80 | 21 | 4 | 4 | 2 |
| | 300 | 4 | 20 | 7 | 4 | 2 |
| 304 SS | 300 | 80 | 17 | 6 | 3 | 2 |
| | 300 | 4 | 14 | 5 | 3 | 2 |

Data from Lake Shore [2]

**LakeShore**

For accurate temperature readings, the sensor and ist leads must be anchored so they are at the same temperature as the sample being measured

Leads with heavy insulation (Teflon) and bigger dimensions minimize the potential for making a thermal short to the surroundings but resulting in more thermal conduction down the leads into the sensing element

$L_2$ = (Heat-sinking length see Tabelle 1)
$T_1 = 300K$, $L_1 = 250mm$ $T_s - T_3 = 1mK$

J.G. Hust: *Thermal anchoring of wires in cryogenic apparatus*, Rev. Sci. Instrum (1970) 41 622

# Low temperature measurement – thermal dumping – heat sink

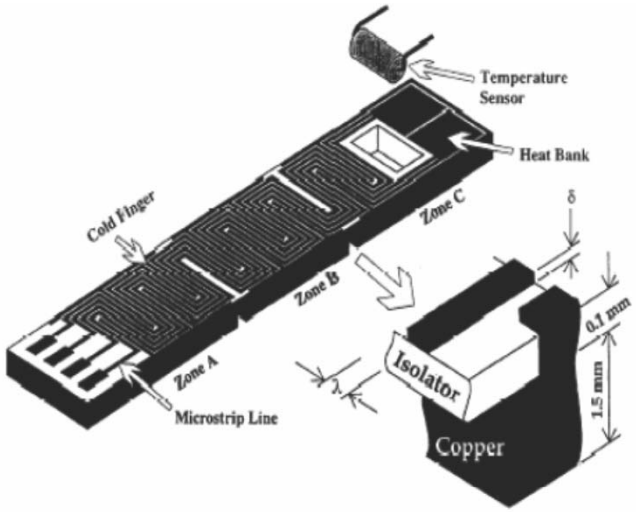


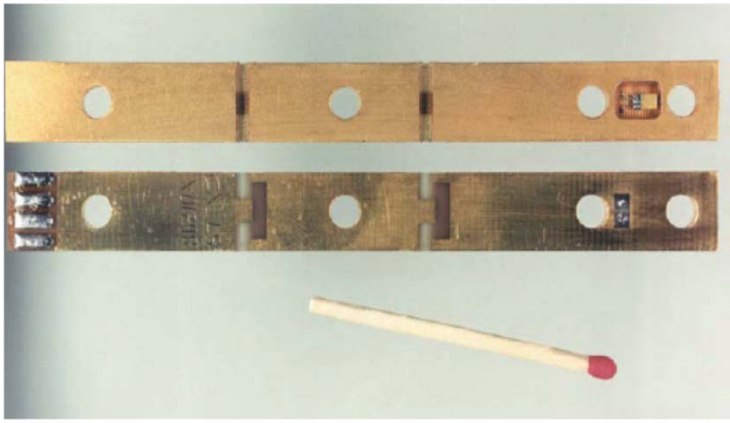

[4]

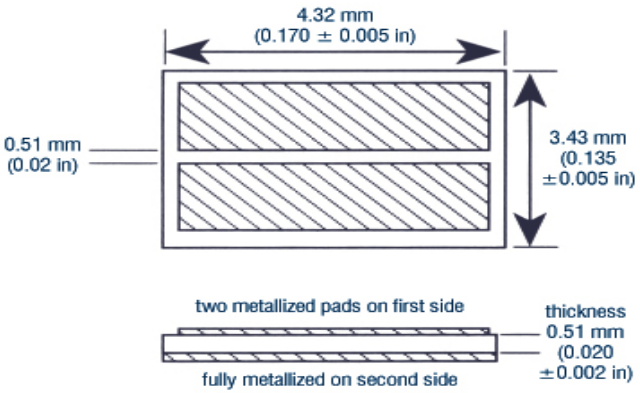


Beryllium Oxide Heat Sink Chip

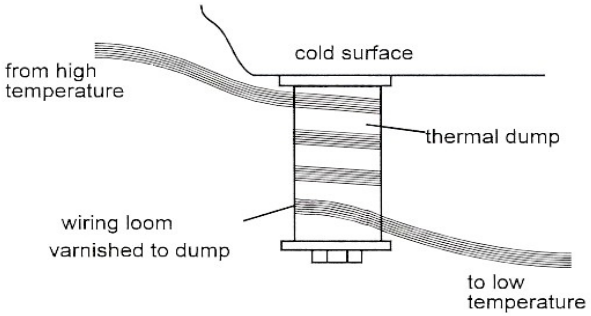


Heat Sink Bobbin

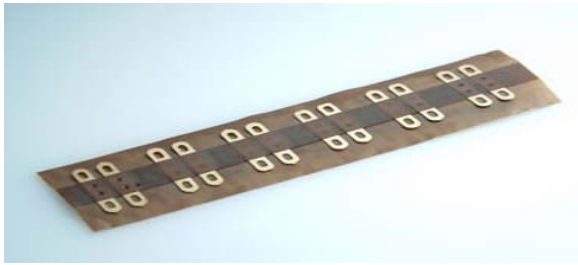

Solder Terminals

# Low temperature measurement – electrical resistance in parallel – feed throughs

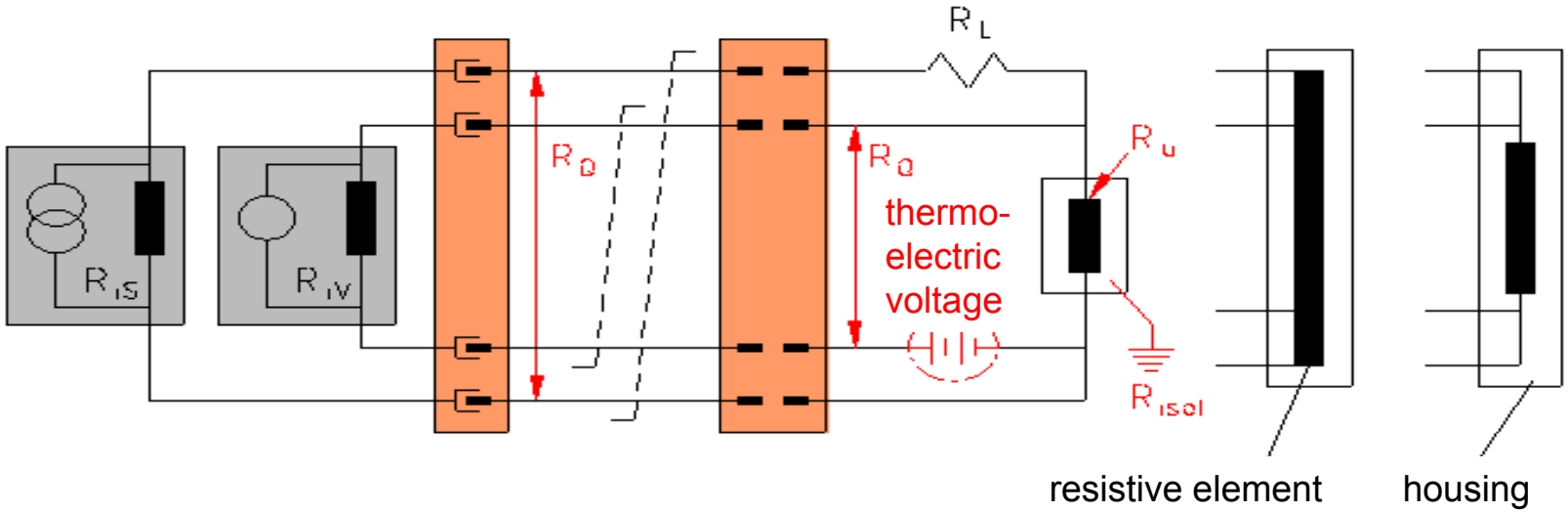


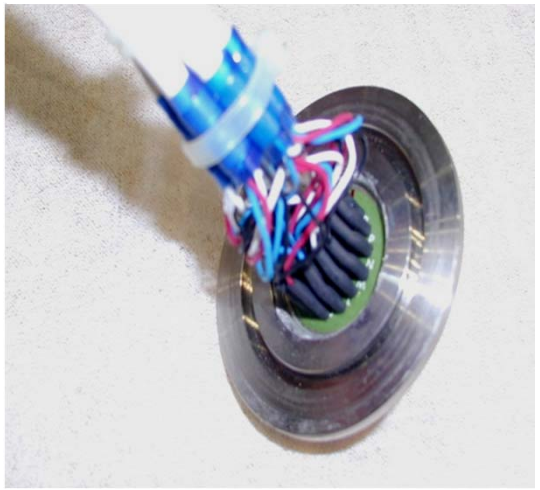

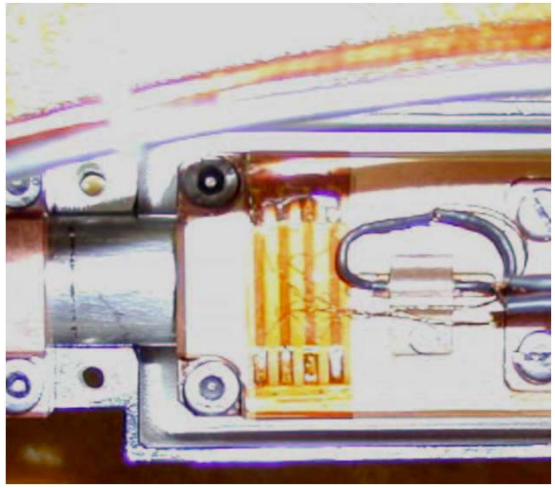

- check the resistance in parallel before connecting the sensor
- if possible avoid flux; use glass fiber brush to clean the surface and to remove layers of oxides
- use heat shrink tubing for solder connections on electrical feed throughs

# Low temperature measurement – thermometer holder

(a) Copper Bobbin

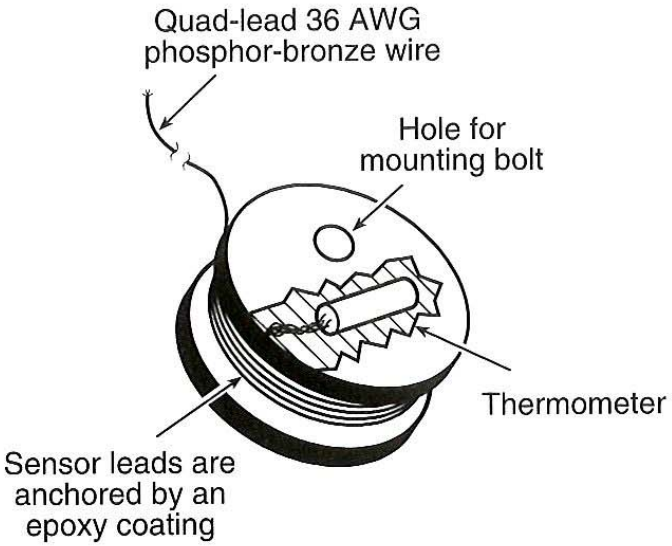


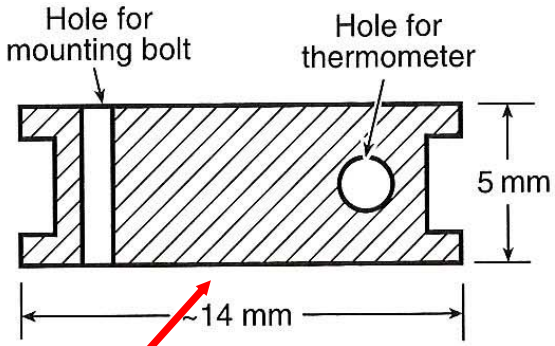


Indium or vacuum grease as contact agent to get a low thermal resistance to the surface

(b) Copper Block

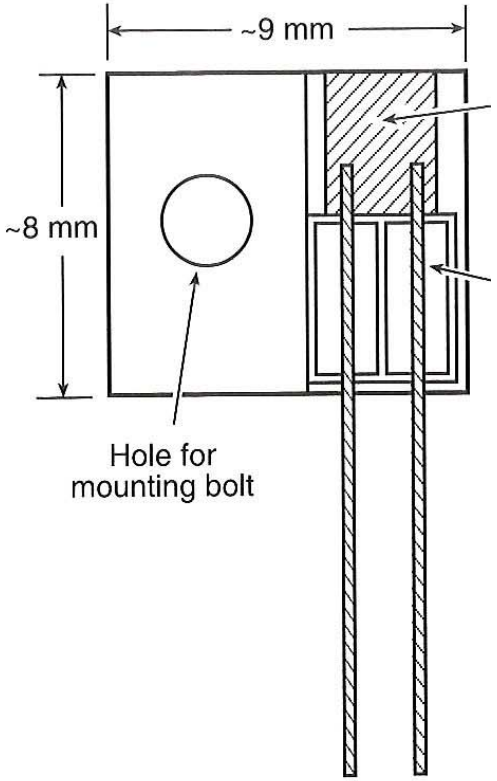


Temperature sensor soldered or glued to copper block

Leads soldered to metallized pads or Beryllium-oxide heat-sink chip

Ekin: Experimental Techniques for Low Temperature Measurements (2007)

# Low temperature measurement – comparison of joint conductance

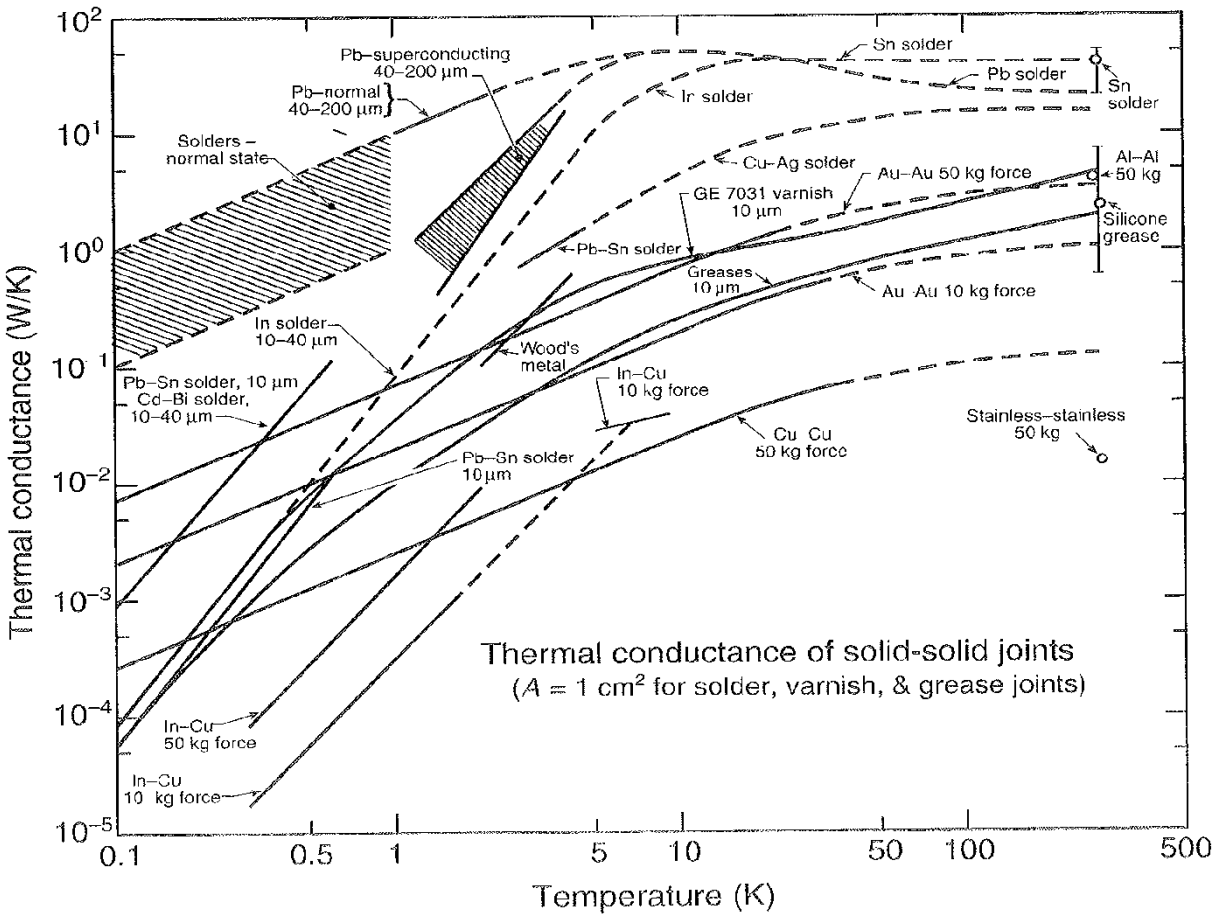


S.W. Van Sciver, M.J. Niles, and J. Pfotenhauer
Thermal and Electrical Contact Conductance Between Metals At Low Temperatures, Proc. Space Cryogenics Workshop (1984)

E Gmelin, et al.
Thermal boundary resistance of mechanical contacts between solids
at sub-ambient temperatures,
J. Phys. D: Appl. Phys. 32 (1999)

# Low temperature measurement – sensor mounting – general rules

- **three aspects:** proper mounting , proper connecting wiring, proper thermal anchoring
  - permanent mounting or for limited time
  - mechanical mounting using a spring loaded clamp is a common method
  - sensor could be changed or replaced – experimental method
  - thermal conductor: Apiezon, grease, vacuum grease, flat indium foil should be used between sensor and surface to enhance thermal contact
  - using Stycast increasing the thermal resistance and it is a more a permanent method
  - Stycast can stress diode packages and cause piezo resistive shift in the calibration curve
  - mounting in holes is a favorite method
  - cylindrical package is obviously better suited for insertion into a cylindrical cavity than a flat square shaped packages

**providing good thermal contact between sensor and surface is essential**

# Low temperature measurement – sensor mounting inside pipe

- sensors are under the stress of the fluid
  - velocity, turbulence
  - static and dynamic pressure
- high reliable feed throughs are necessary
- sensor replacement needs opening of pipe
- measurement of stagnation temperature

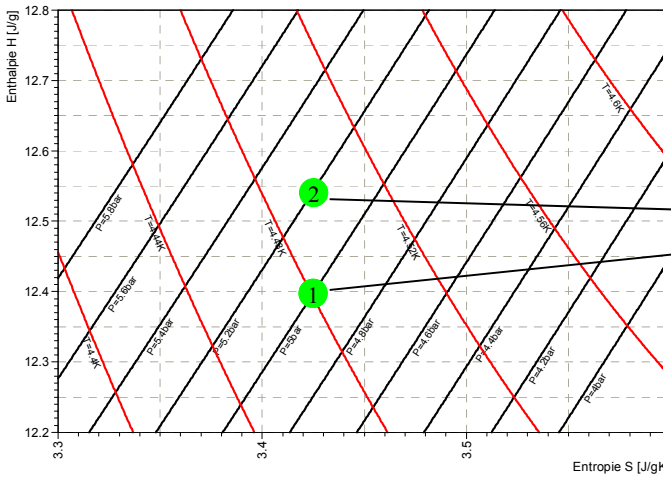


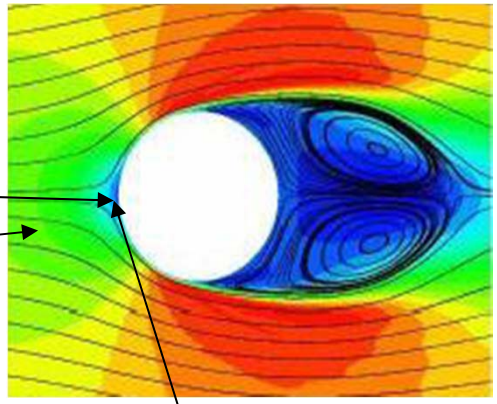

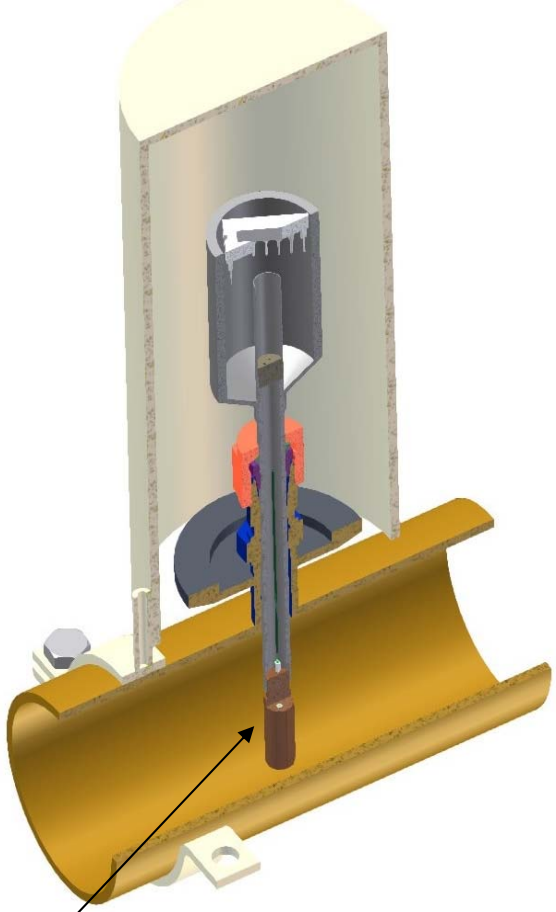

Stagnation point

# Low temperature measurement – TVO sensor mounted on end of capillary

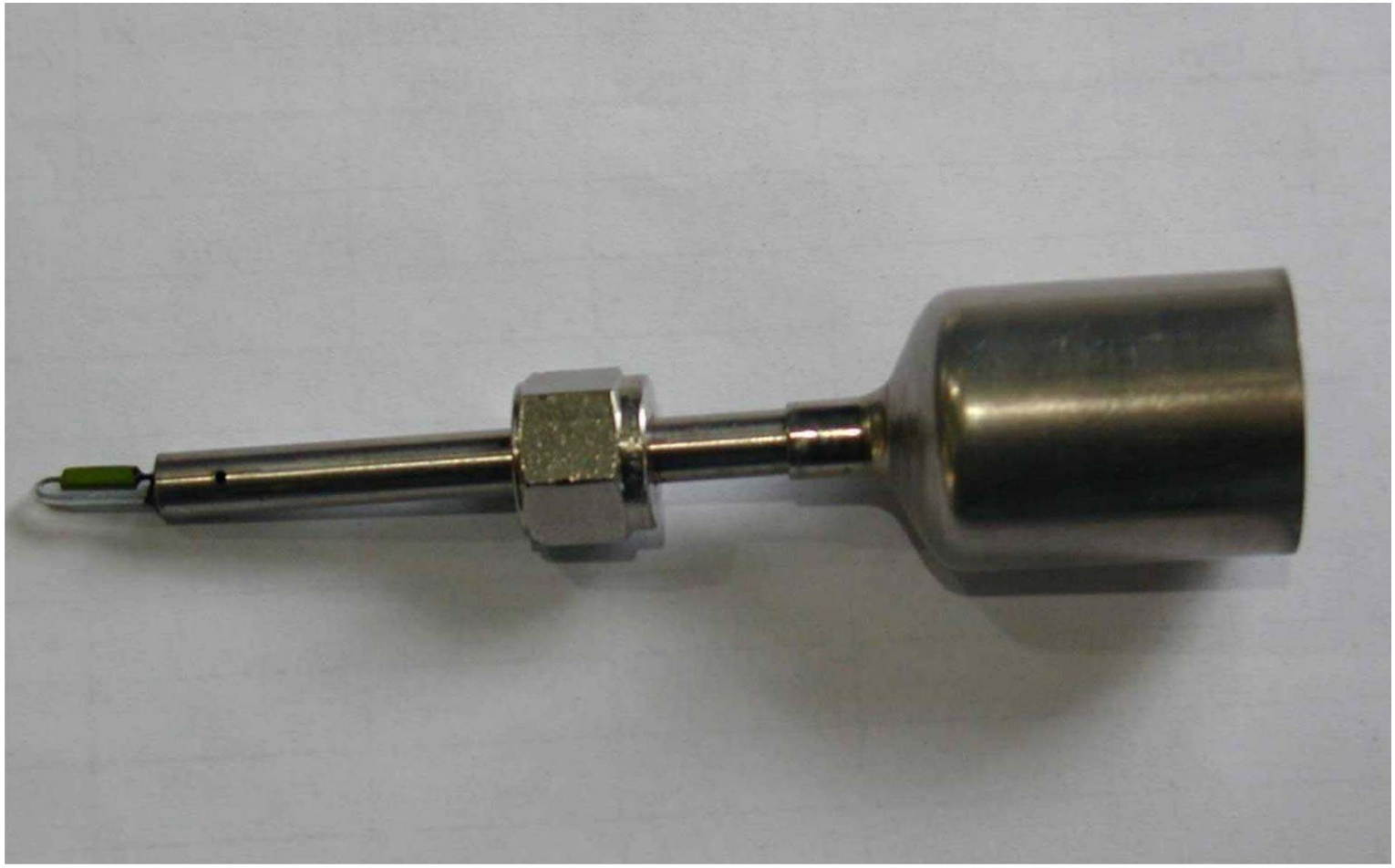

# Low temperature measurement – TVO sensor mounted on end of capillary

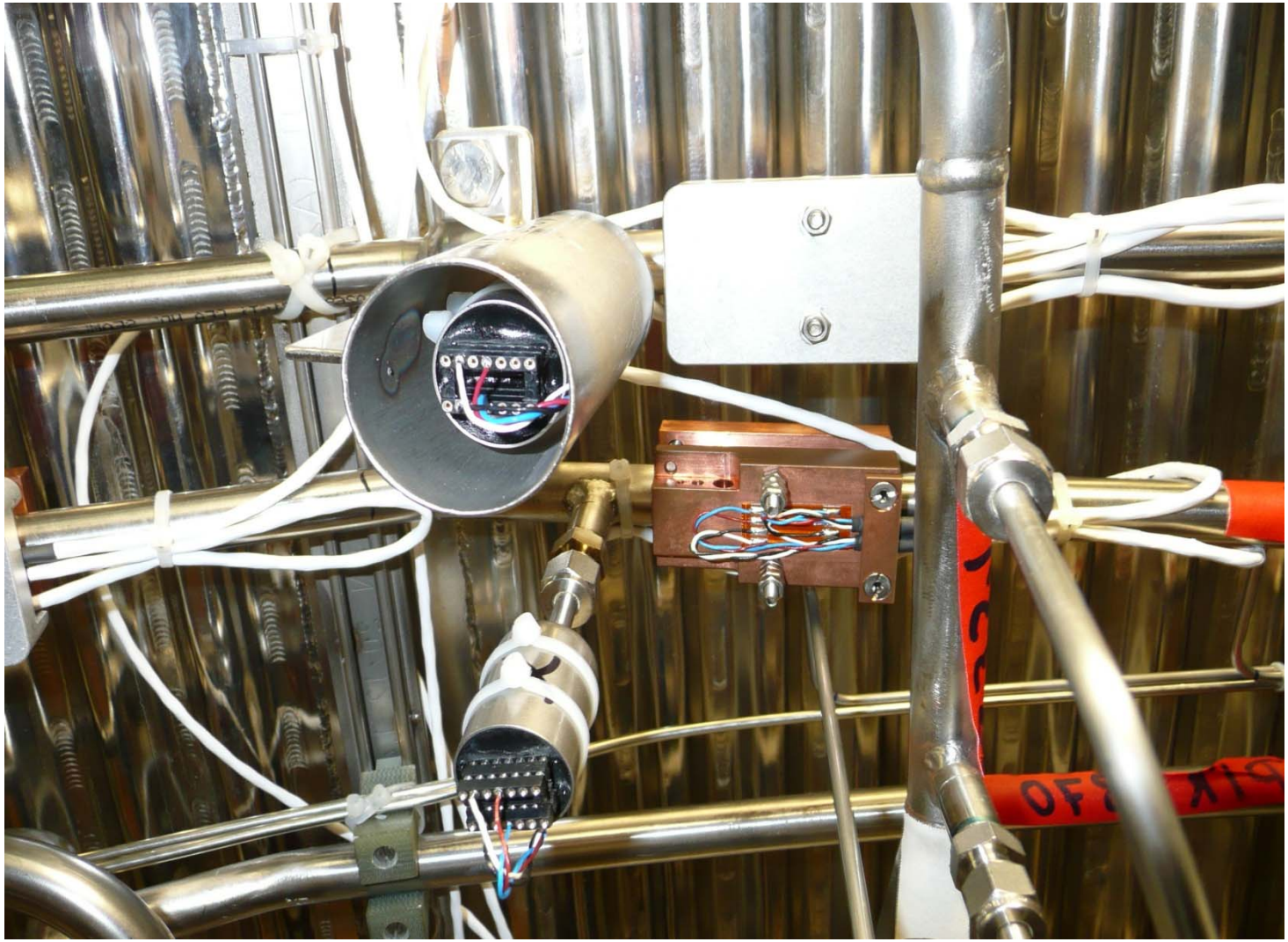

# Low temperature measurement – sensor mounting outside pipe

- measurement of the surface temperature of the pipe
- additional thermal resistance between sensor and fluid
- very efficient radiation shield and proper sensor mounting necessary
- influences:
  - residual heat load
  - flow conditions

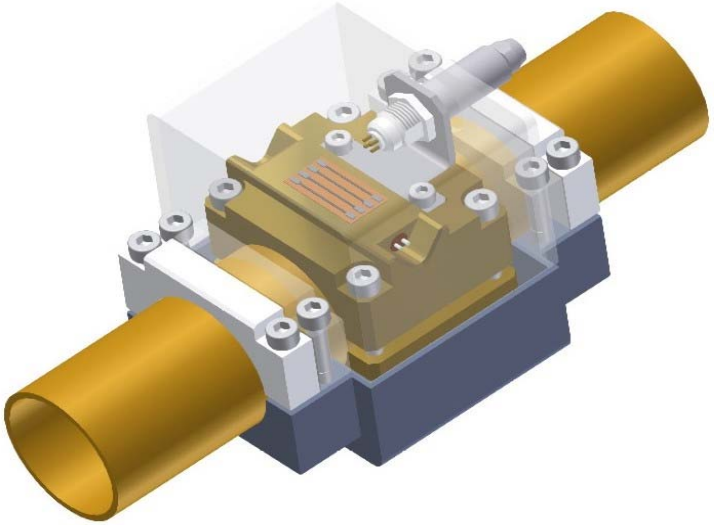

temperature difference between temperature of the sensor $T_S$ and temperature of the fluid T

$$\Delta T = T_s - T$$

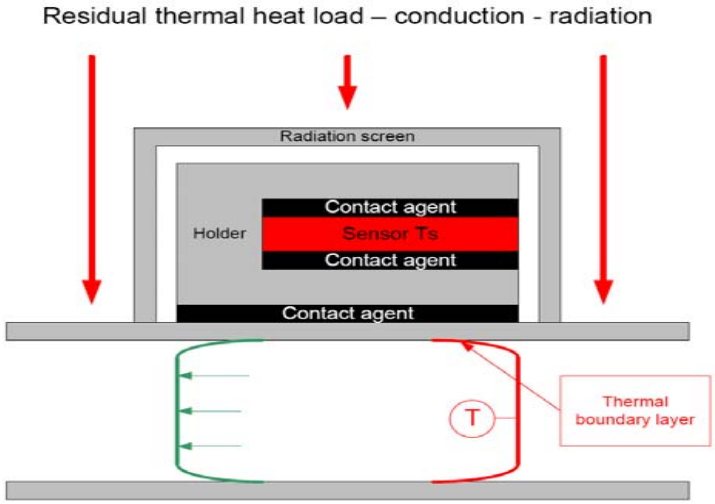

# Low temperature measurement – sensor mounting outside pipe

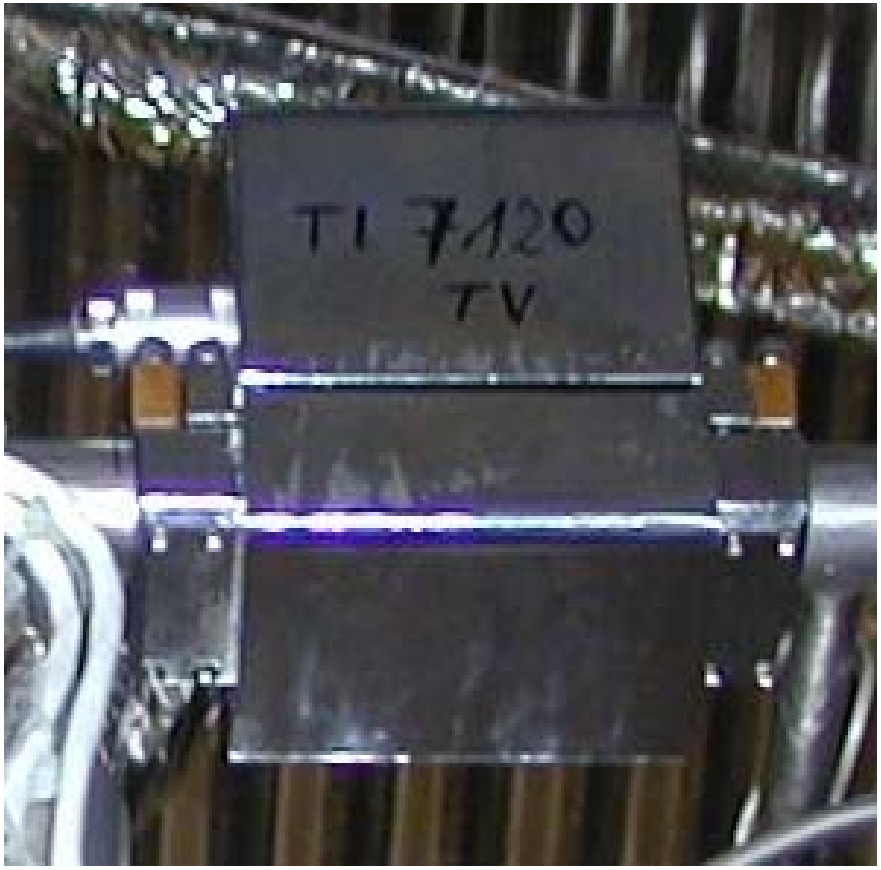


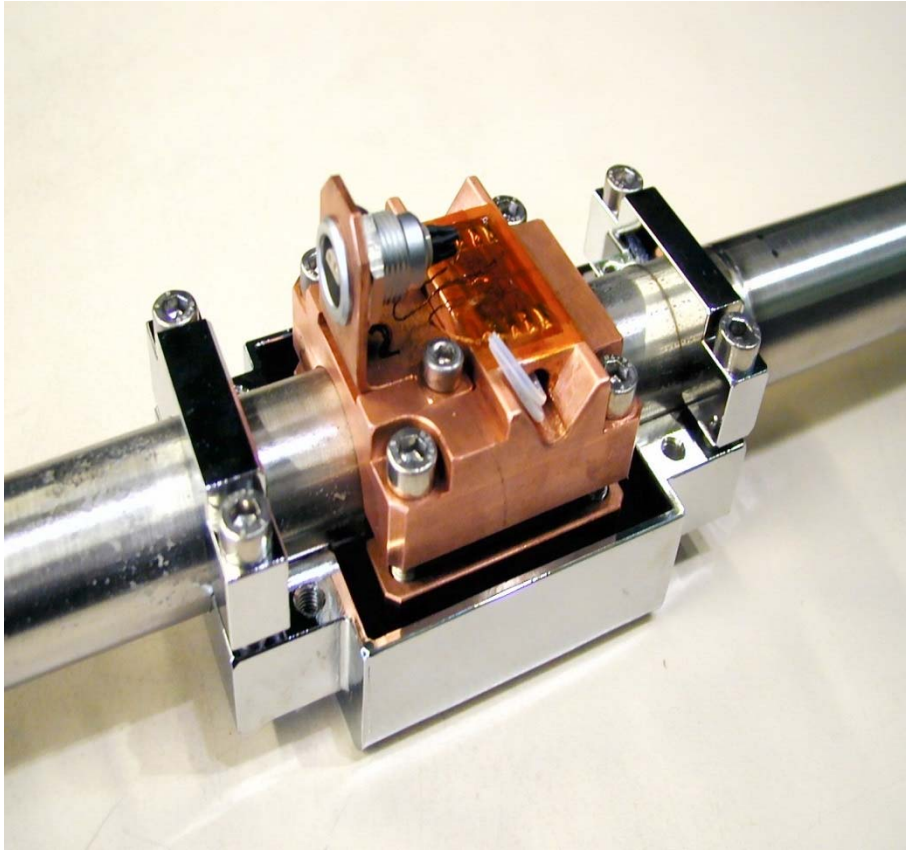

# Low temperature measurement – comparison between inside and outside mounting of sensor in pipes

| | inside mounting | outside mounting |
|---|---|---|
| **achievable accuracy** | **high**<br><br>depending on homogenous temperature distribution<br><br>**local measurement of the fluid**<br><br>**temperature at the stagnation point of the sensor** | **moderate**<br><br>depending on residual heat load, vacuum conditions and flow conditions<br><br>several thermal resistances between sensor and fluid<br><br>**integral measurement of the surface temperature of the piping** |
| **cost for manufacturing** | of equal value | of equal value |
| **cost for tests** | **high**<br><br>thermal cycling, afterwards leak test of the feed through necessary | **less**<br><br>arrangement could be tested in advance on the work bench |
| **skills of workers** | **high**<br><br>special knowledge of feed through preparation and mounting | **moderate**<br><br>basic skills sufficient |
| **reliability** | **risks of leaks** | **very high** |

# Low temperature measurement – influences on accuracy

- caused by sensor
  - accuracy of calibration
  - stability
  - approximation error
- caused by measurement technique
  - voltage measurement (2 or 4 wire circuit)
  - current measurement, stability of current source
  - overheating (self-heating)
- caused by wiring
  - thermoelectric voltage
  - resistance in parallel
  - insulation resistance
  - cable routing (twisted or not)
  - heat conduction
- caused by sensor mounting
  - mounting inside pipe
  - mounting outside pipe
  - flow conditions
- boundary conditions of experiment
  - magnetic field
  - pressure

# Low temperature measurement – general considerations of uncertainty

**for example: a resistive thermometer measures only its temperature**
**- the voltage drop on the resistive element**

uncertainties from random effects ;
random errors can be described and
optimized with statistical methods

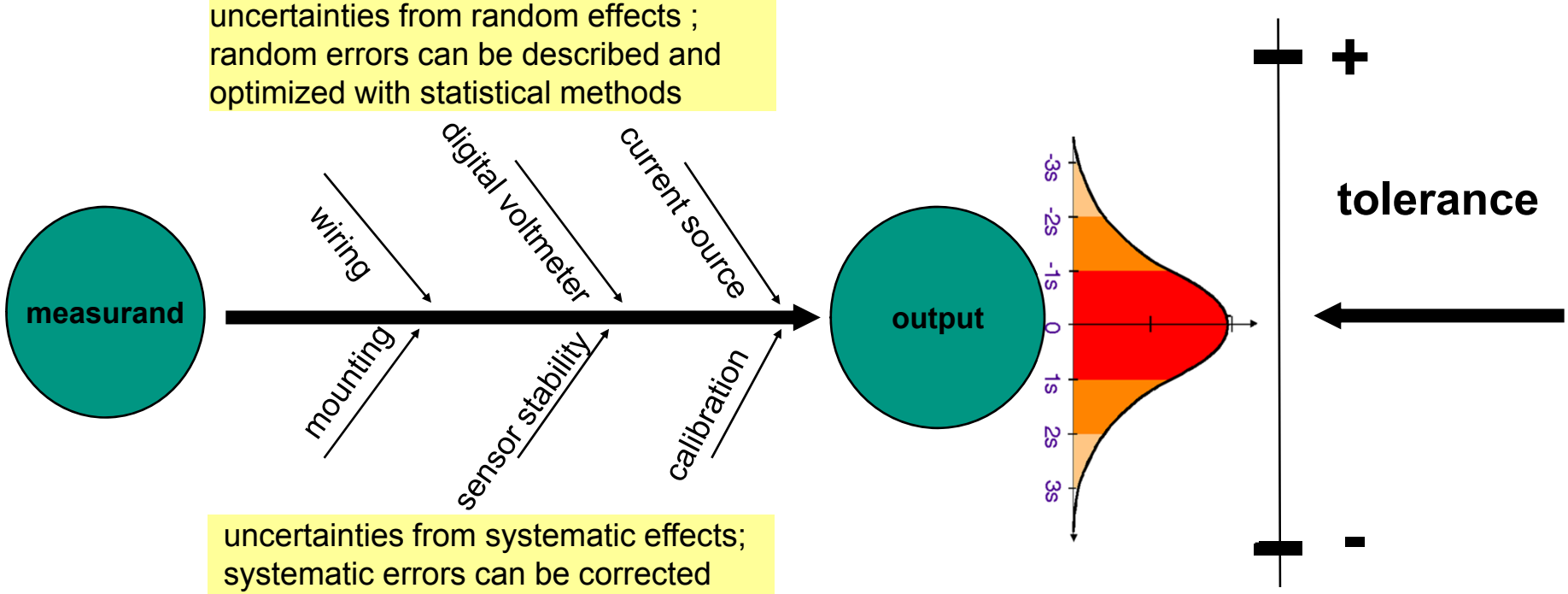


uncertainties from systematic effects;
systematic errors can be corrected

measurement results are approximations of the real value

**think about the entire system not just the sensor**

# Pressure / Differential Pressure Measurements

- *pressure measurement at room temperature*
  - risks of thermoacoustic oscillations
  - loss of dynamics of measurement
  - big selection of transducer
  - reliable
- *pressure measurement at cryogenic temperature*
  - less choice of transducer
  - change of sensitivity

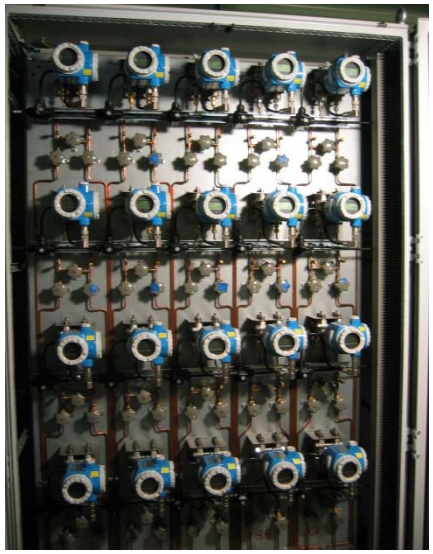

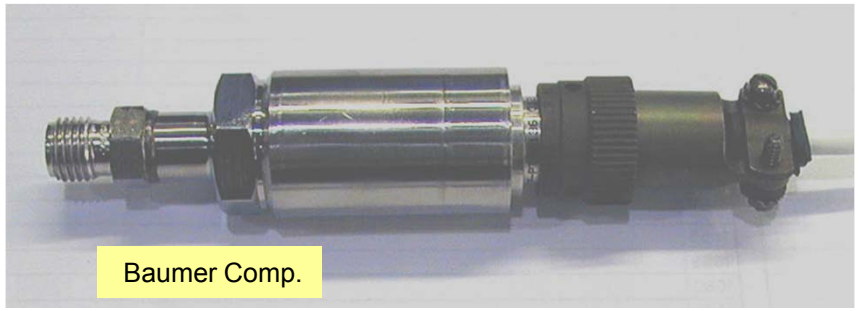


synoTECH Sensor und Meßtechnik GmbH

PCB Piezotronics
Cryogenic pressure sensor
Serie 102A10

# Pressure / Differential Pressure Measurements
## – thermo acoustic oscillations (TAO´s)

thermo acoustic oscillations occur in cryogenic systems where a long tube open at the cold end is extended to the closed end at the warm boundary. TAO's can be very damaging, as the oscillations are accompanied by a considerable heat conduction down the tube. This can increase the heat leak of the system by several orders of magnitude.

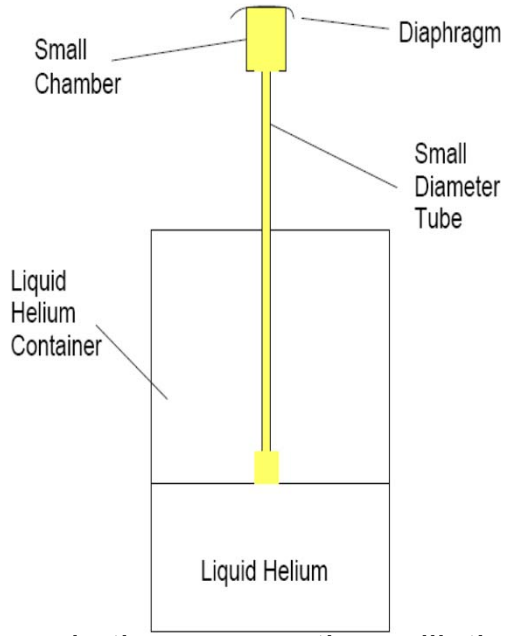


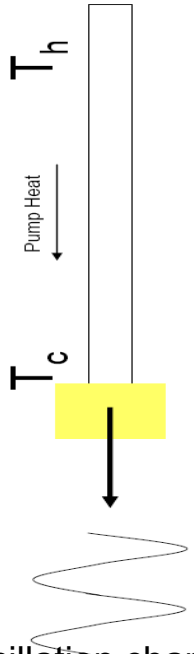


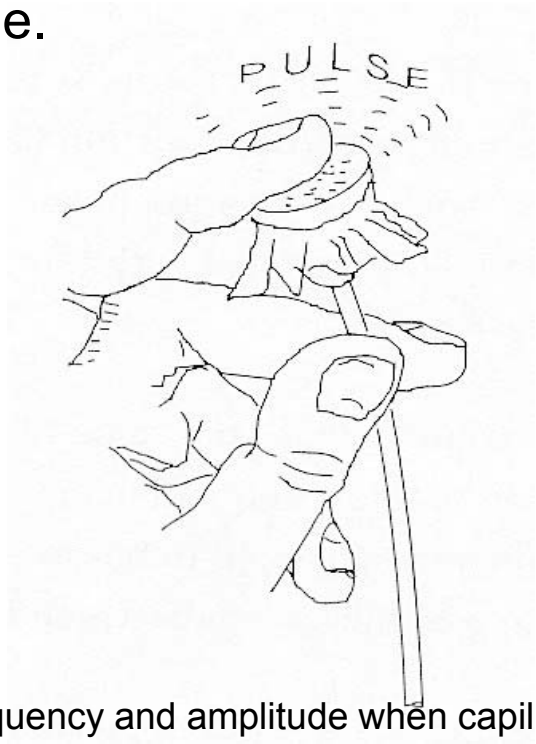


example thermo acustic oscillations: acoustic oscillation changes frequency and amplitude when capillary leaves liquid

# Pressure / Differential Pressure Measurements
## – thermo acoustic oscillations (TAO´s)

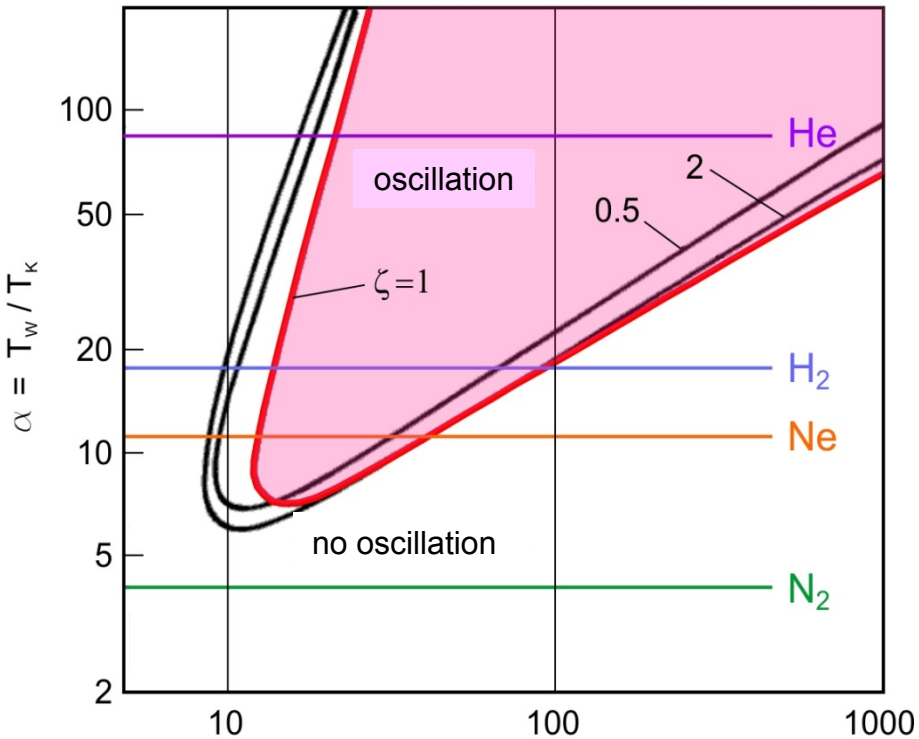


$$\Delta = \frac{d}{2}\sqrt{\frac{c}{l \cdot \upsilon}}$$

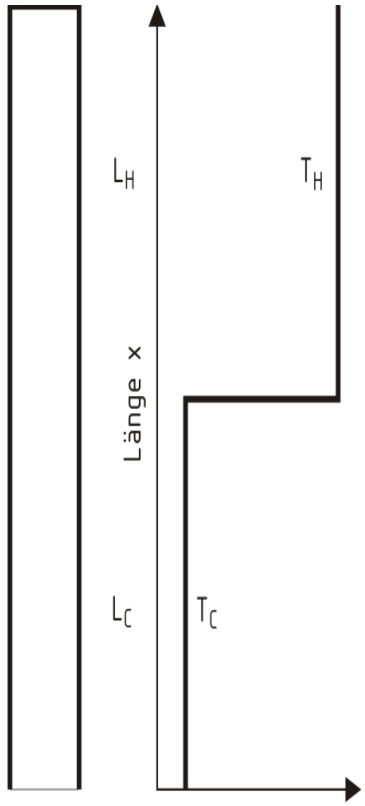


$T_w$: Temperature warm part
$T_k$: Temperature cold part
d: Diameter of capillary
c: Velocity of sound cold
l: length cold
ζ: Ratio lenght warm / lenght cold
υ: kinematic viscosity cold


[4] T. von Hofmann, U. Lienert, H. Quack: *Experiments on thermally driven gas Oscillations*, Cryogenics 13 (1973)


prevention: change in geometry, reduce diameter at the cold end, insertion of a wire

# Pressure / Differential Pressure Measurements

- comparison of pressure measurement at ambient temperature and at low temperature

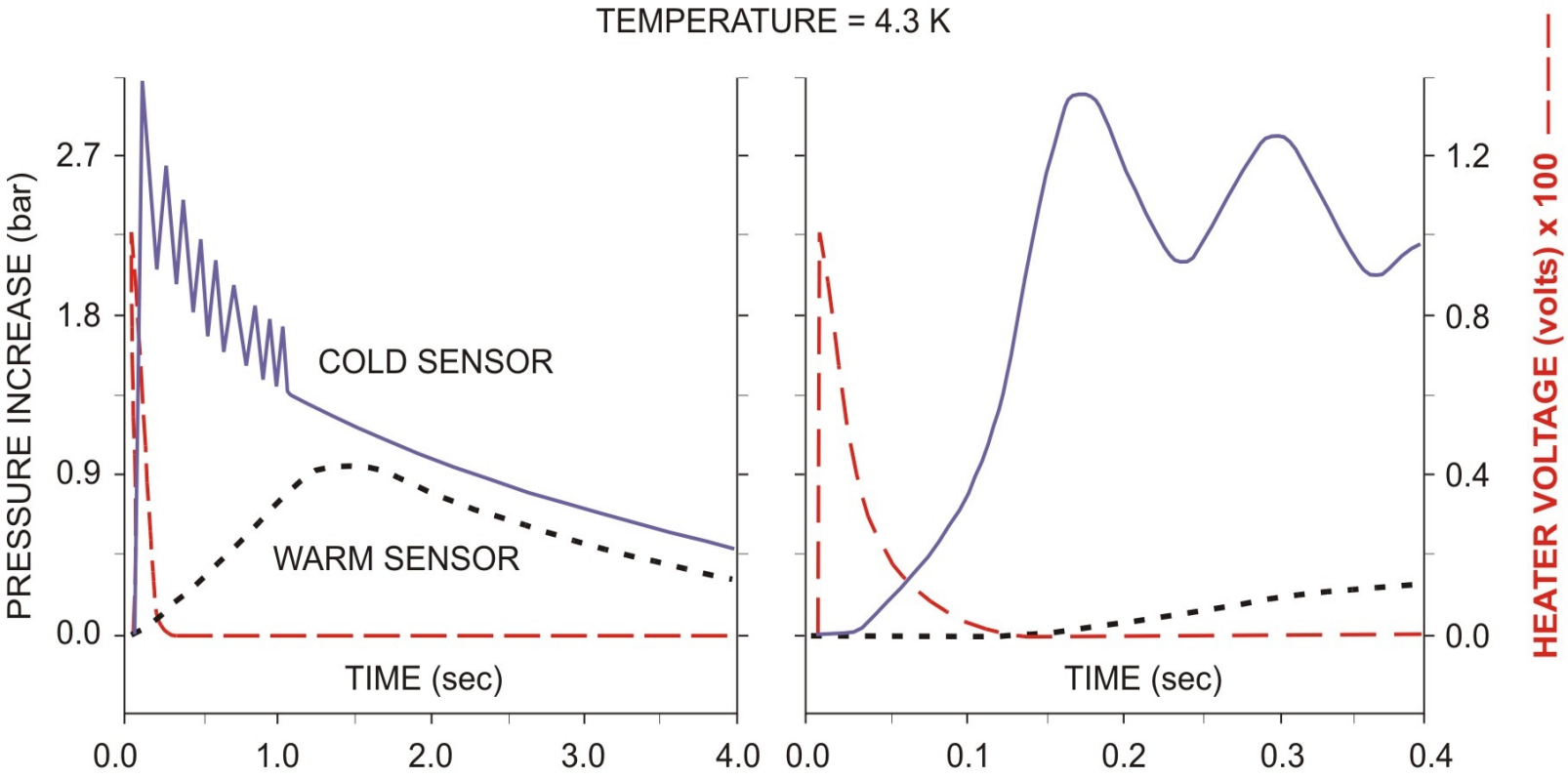


example: sensor at 4.3K and at 300K, capillary $d_i$ ~ 1 mm, l ~ 6 m

[5] F. Haug, A. McIntruff: *Measurements of pressure transmission in long capillaries*, CEC/ICMC, Los Angeles 1989

# Pressure / Differential Pressure Measurements

## - differential pressure sensor

Baumer Company

- thin-film -sensor
- shift in sensitivity ~ 2 % between 300 K and 4.2 K
- sensitivity 0.12 mV / bar V
- overpressure 2 · nominal pressure

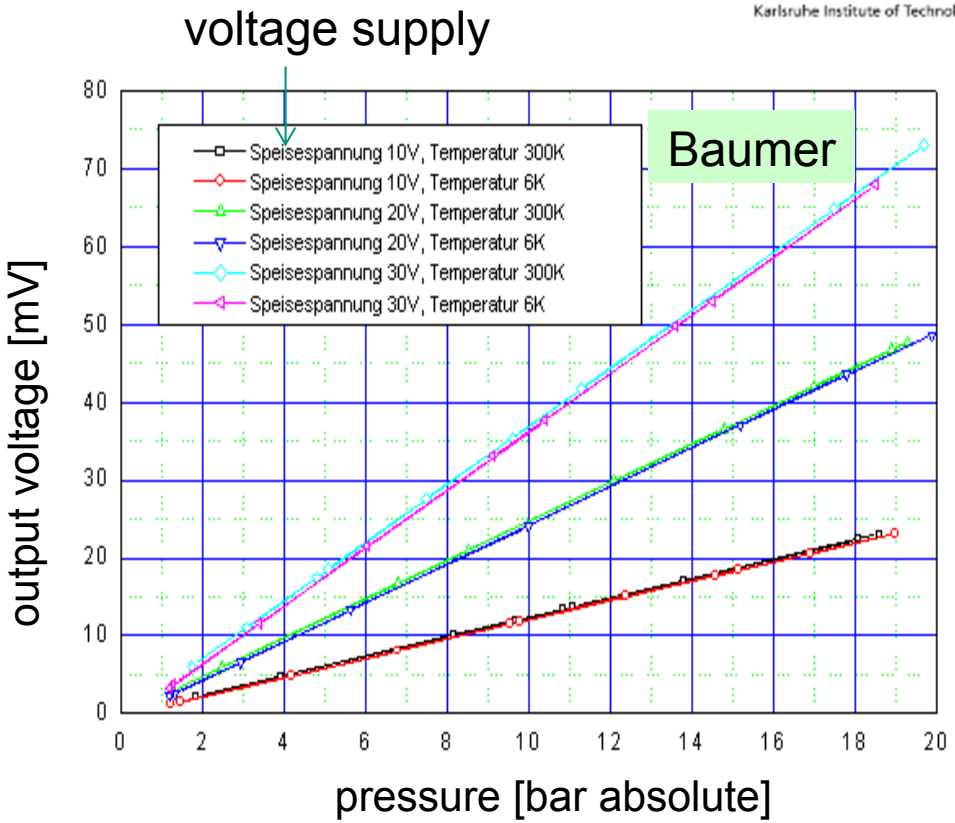


# Mass flow measurement – orifice

according ISO 5167-2
with corner tappings

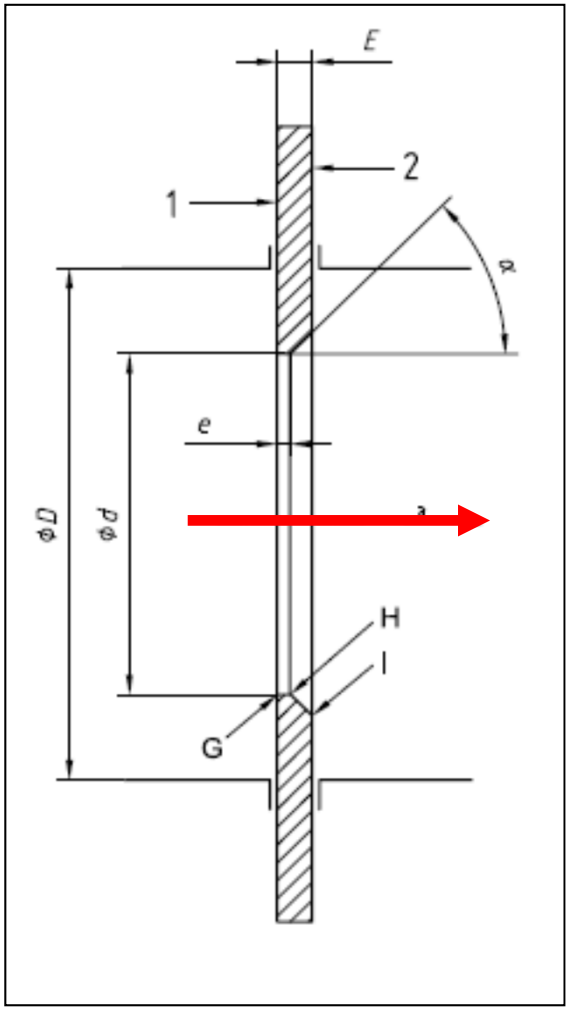


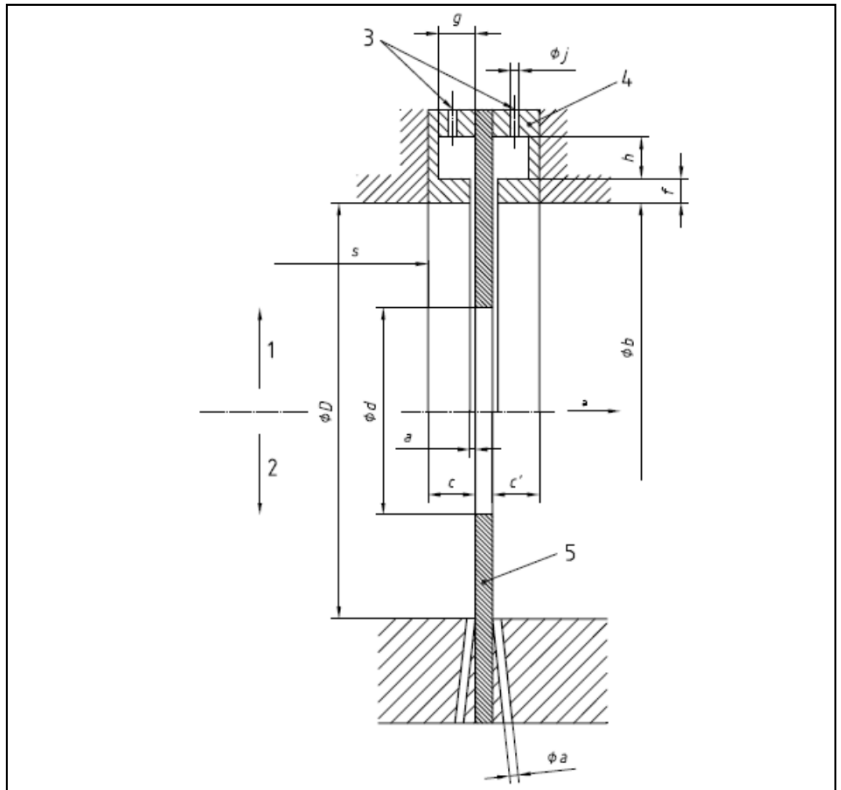


**Key**

1 carrier ring with annular slot
2 individual tappings
3 pressure tappings
4 carrier ring
5 orifice plate

a Direction of flow.

$f$ = thickness of the slot
$c$ = length of upstream ring
$c'$ = length of the downstream ring
$b$ = diameter of the carrier ring
$a$ = width of annular slot or diameter of single tapping
$s$ = distance from upstream step to carrier ring
$g$, $h$ = dimensions of the annular chamber
$\varnothing j$ = chamber tapping diameter

# Mass flow measurement – classical venturi tube
## ISO 5167- 4

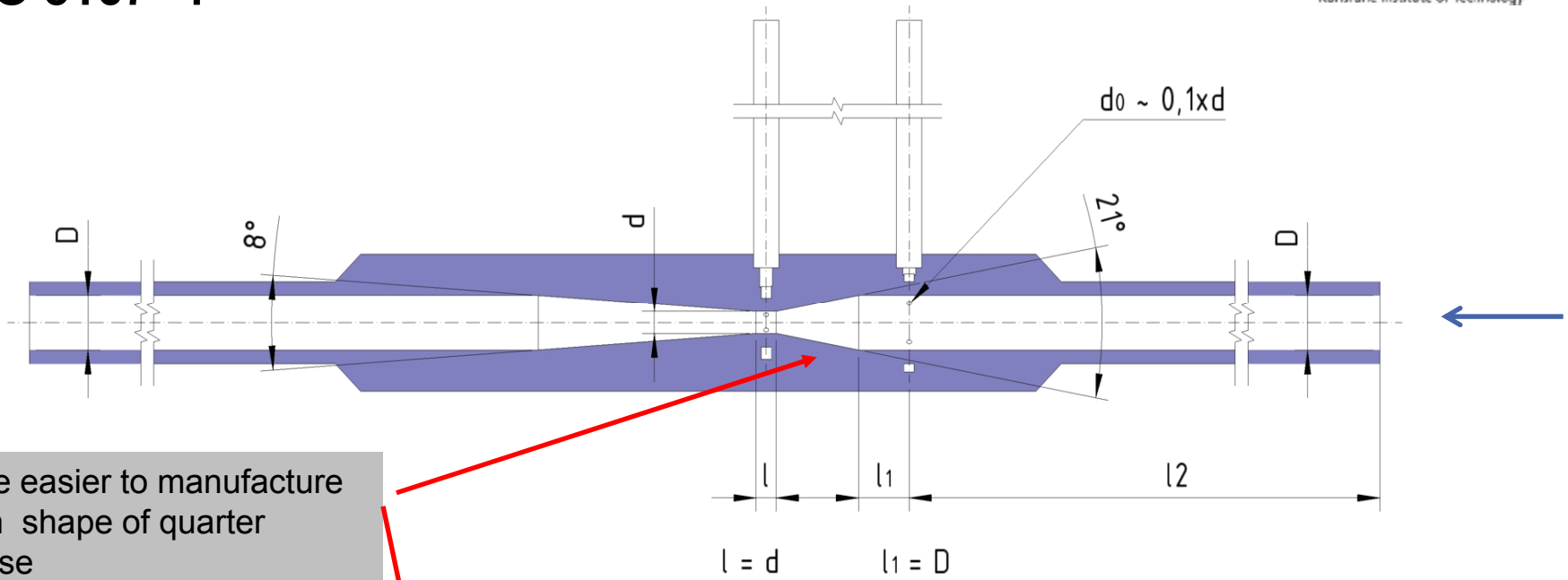


cone easier to manufacture than shape of quarter ellipse

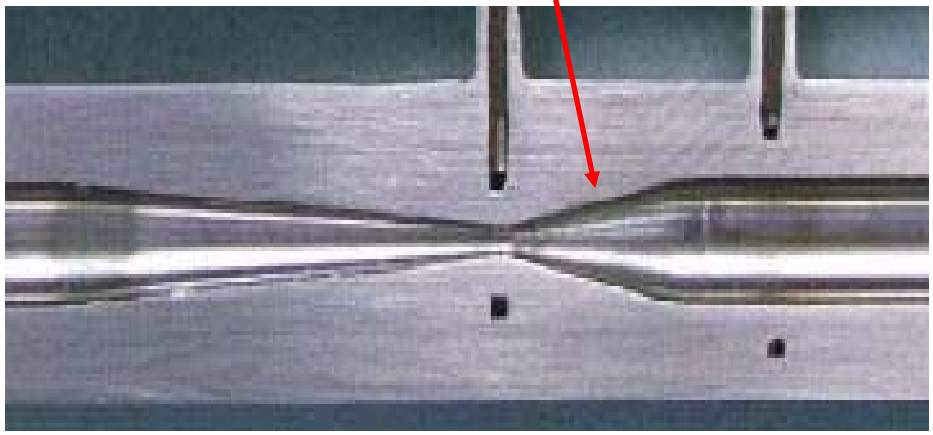

characteristics:

- cylindrical section D
- conical section $21^0$
- cylindrical section d (throat)
- diameter ratio $\beta = d/D$
- throat ratio l/d = 1
- conical section angle $\theta = 7 – 15^0$ (diffuser)
- cylindrical section D

# Mass flow measurement – classical venturi tube
## ISO 5167- 4

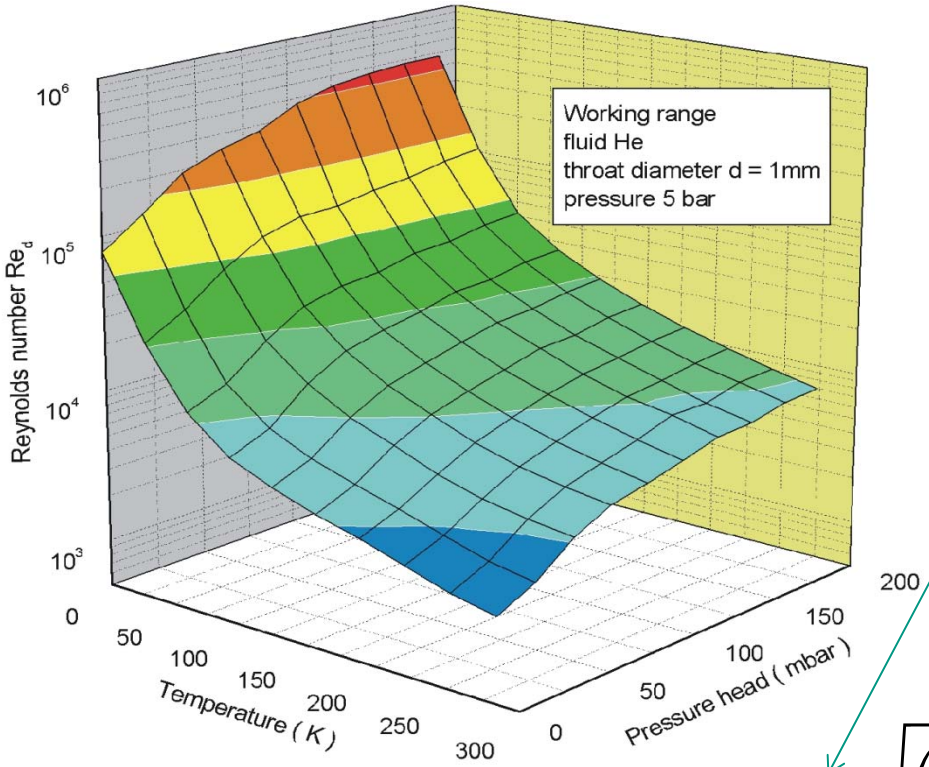


$\dot{m}$: mass flow rate

D: upstream internal pipe diameter

d: diameter of throat under working conditions

C: coefficient of discharge, C = f (Re)

β: diameter ratio β= d/D

$\Delta p_h$: differential pressure (pressure head)

ρ: density of fluid, ρ = f (p, T)

ε: expansibility factor

τ: pressure ratio $p_2/p_1$ (throat pressure / upstream pressure)

κ: isentropic coefficient, κ = f(p,T)

$$\varepsilon = \sqrt{\left(\frac{\kappa \cdot \tau^{2/\kappa}}{\kappa - 1}\right) \cdot \left(\frac{1-\beta^4}{1-\beta^4 \cdot \tau^{2/\kappa}}\right) \cdot \left(\frac{1-\tau^{(\kappa-1)/\kappa}}{1-\tau}\right)}$$

$$\dot{m} = \frac{C}{\sqrt{1-\beta^4}} \cdot \varepsilon \cdot \frac{\pi}{4} \cdot d^2 \cdot \sqrt{2 \cdot \Delta p \cdot \rho}$$

# Mass flow measurement – classical venturi tube
## ISO 5167- 4 – discharge coefficient C

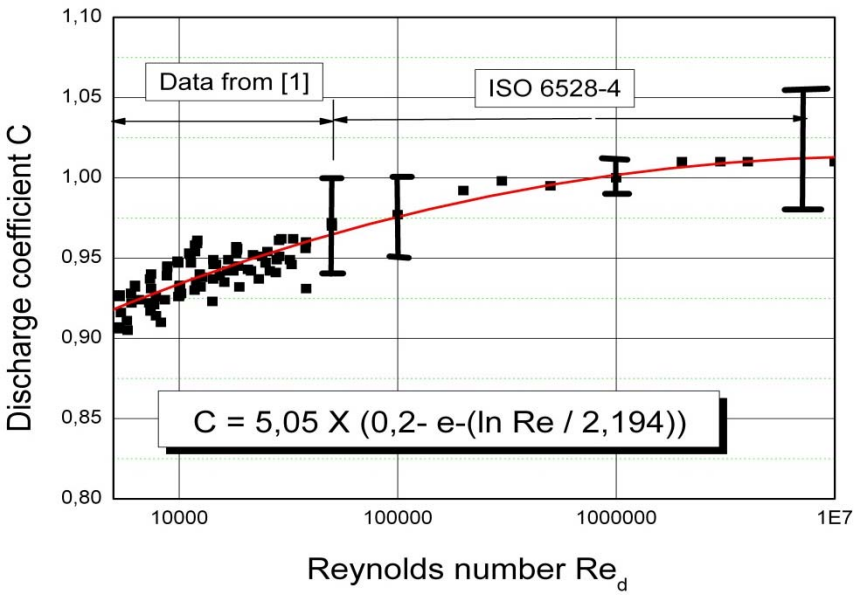


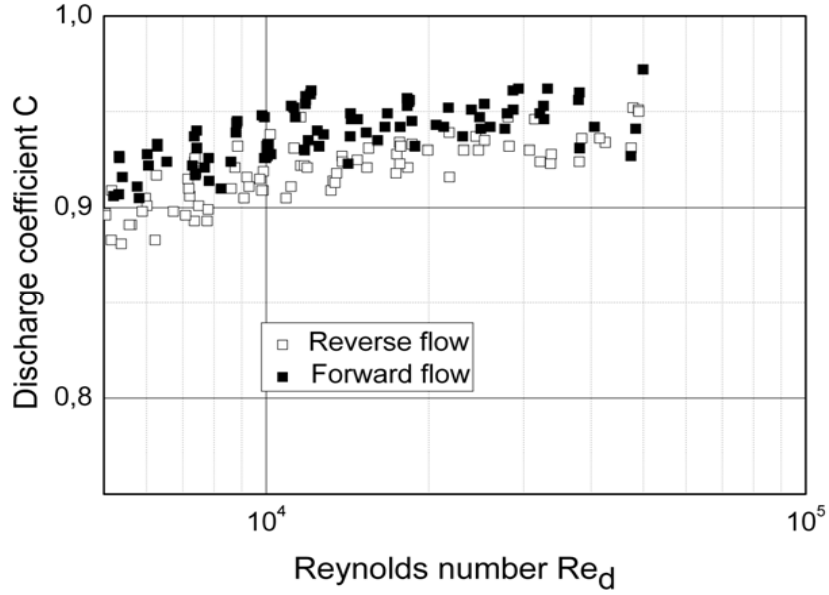


**5.5.3 Discharge coefficient of the classical Venturi tube with a machined convergent section**

Classical Venturi tubes with a machined convergent section can only be used in accordance with this part of ISO 5167 when

$50\ \text{mm} \leqslant D \leqslant 250\ \text{mm}$

$0{,}4 \leqslant \beta \leqslant 0{,}75$

$2 \times 10^5 \leqslant Re_D \leqslant 1 \times 10^6$

Under these conditions the value of the discharge coefficient $C$ is

$C = 0{,}995$

ISO 5167-4

**Table B.2 — Values of the discharge coefficient $C$ and the uncertainty as a function of $Re_d$**

| $Re_d$ | $C$ | Uncertainty[a] |
|---|---|---|
| $5 \times 10^4$ | 0,970 | [illegible] |
| $1 \times 10^5$ | 0,977 | 2,5 |
| $2 \times 10^5$ | 0,992 | 2,5 |
| $3 \times 10^5$[b] | 0,998 | 1,5 |
| $5 \times 10^5$ to $10^6$ | [illegible] | 1 |
| $10^6$ to $2 \times 10^6$ | [illegible]000 | 2 |
| $2 \times 10^6$ to $10^8$ | [illegible]010 | 3 |

[a] For low Reynolds numbers, the spread of the experimental results is not a Gaussian distribution, the mean deviation of results is more than the mean value of $C$ being greater than that of greater values.

[b] If $\beta \geqslant 0{,}67$, there is a difference between the values of discharge coefficient and uncertainty for $Re_d = 3 \times 10^5$ recommended in this table and those in 5.5.3 and 5.7.2.

ISO 5167-4
Outside the scope

# Mass flow measurement – classical venturi tube
## ISO 5167- 4 – permanent pressure loss

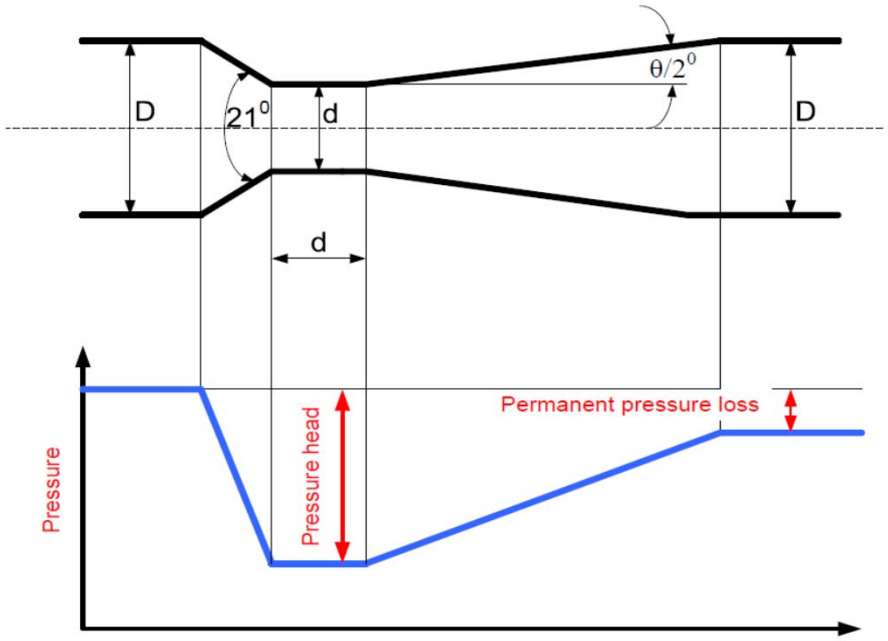


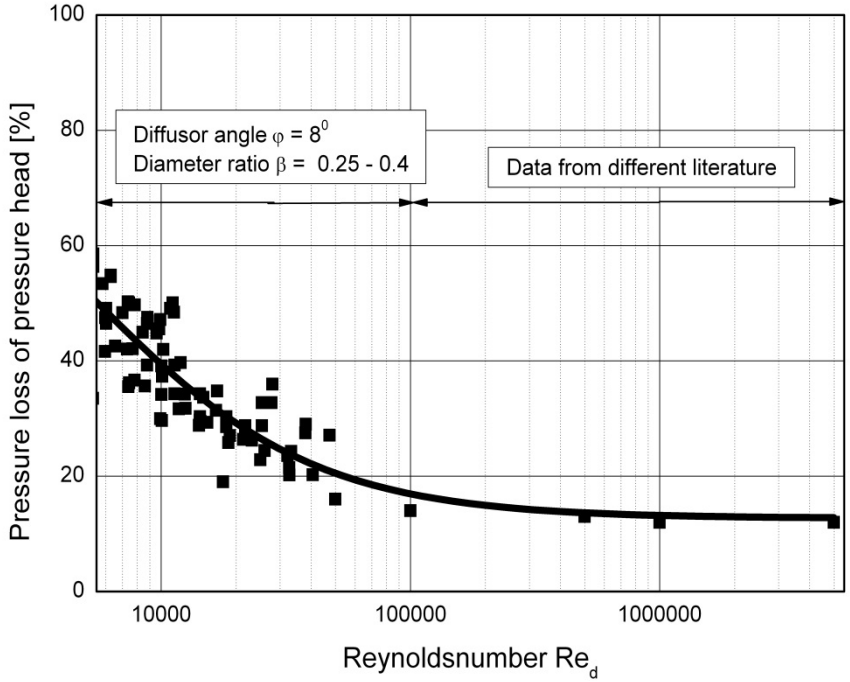


relative pressure loss: $\xi$ = permanent pressure loss $\Delta p_p$ / pressure head $\Delta p_h$

$$\xi = \Delta p_p \ / \ \Delta p_h$$

# Mass flow measurement – classical venturi tube
## ISO 5167- 4 – pressure measurement equipment

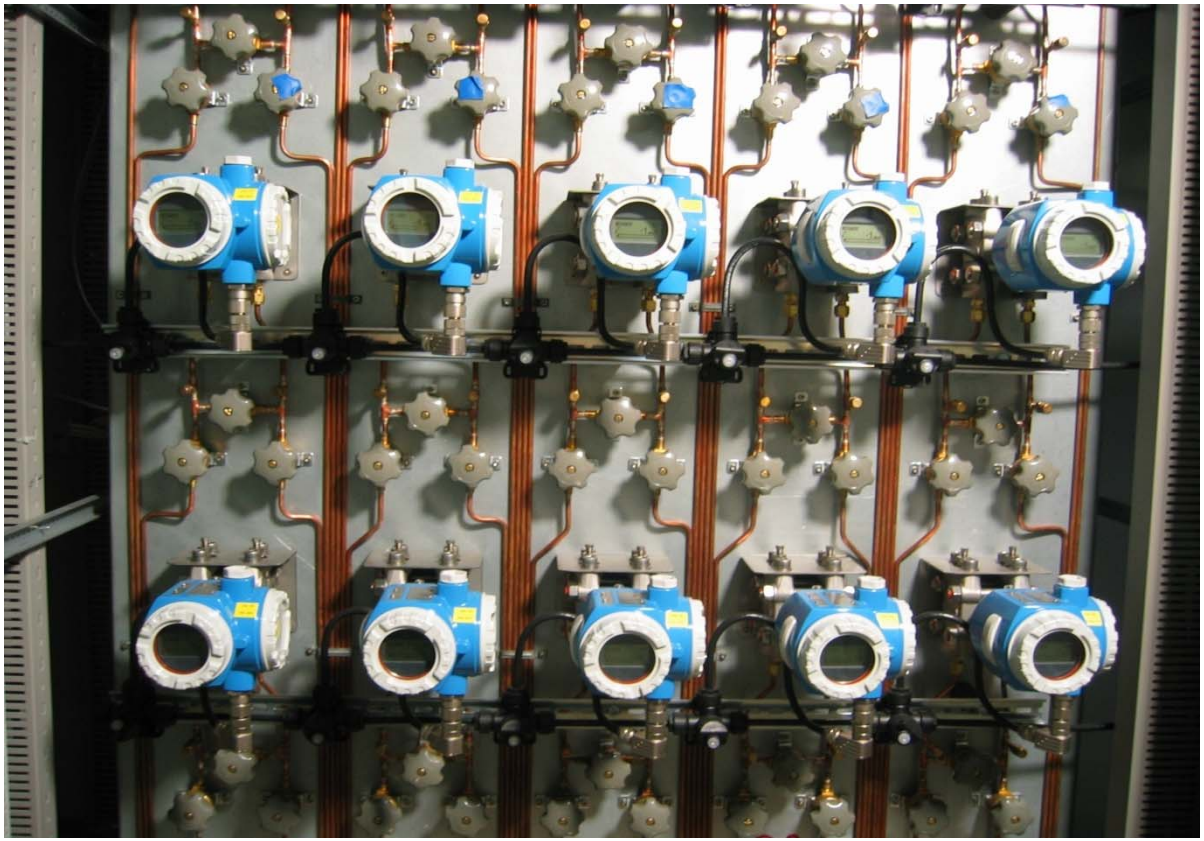

Leak test procedure necessary :
High static pressure load
there should no indication of
differential pressure
otherwise leaks in the auxilliary
equipment

# Mass flow measurement – classical venturi tube ISO 5167- 4

- influences on the uncertainty budget
  - manufacturing defects - prevention or reduction by calibration
  - selection of β-ratio: reduction at low β-ratio
  - static hole problem - prevention or reduction by geometrical layout of pressure measuring connectors
  - flow distortion - prevention or reduction by upstream length, conditioner
  - flow pulsation - prevention or reduction by pump system, stable controller
  - capillary effects - prevention or reduction by high pressure head

# Mass flow measurement – V-cone

- advantages
  - pressure drop = 50% of pressure head
  - flow coefficient constant
  - calibration is included by manufacturers

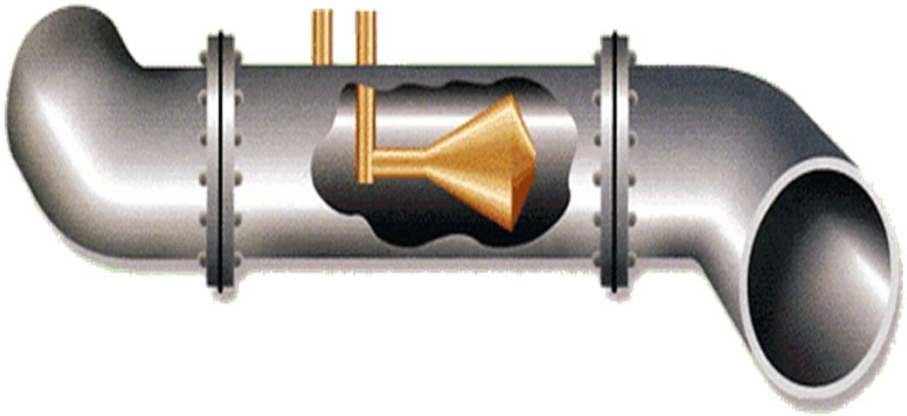

- disadvantages
  - nominal diameter of 15 mm is the smallest (how far we know)

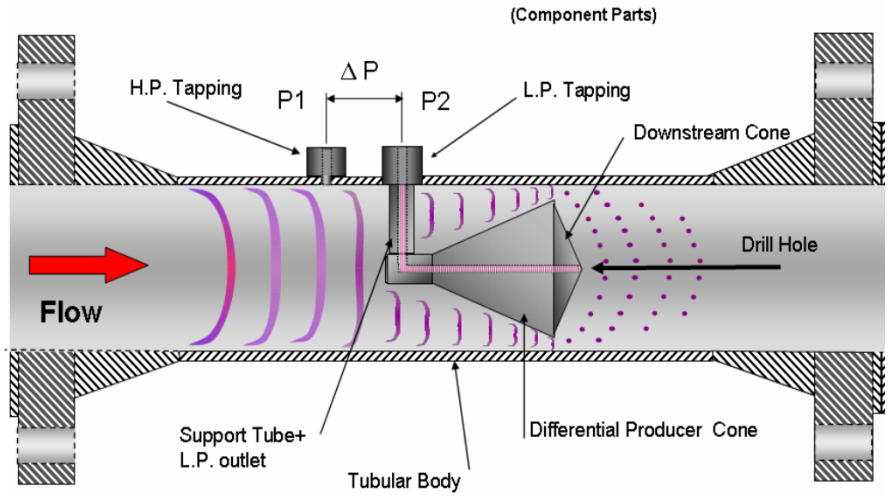

# Mass flow measurement – coriolis mass flow meter

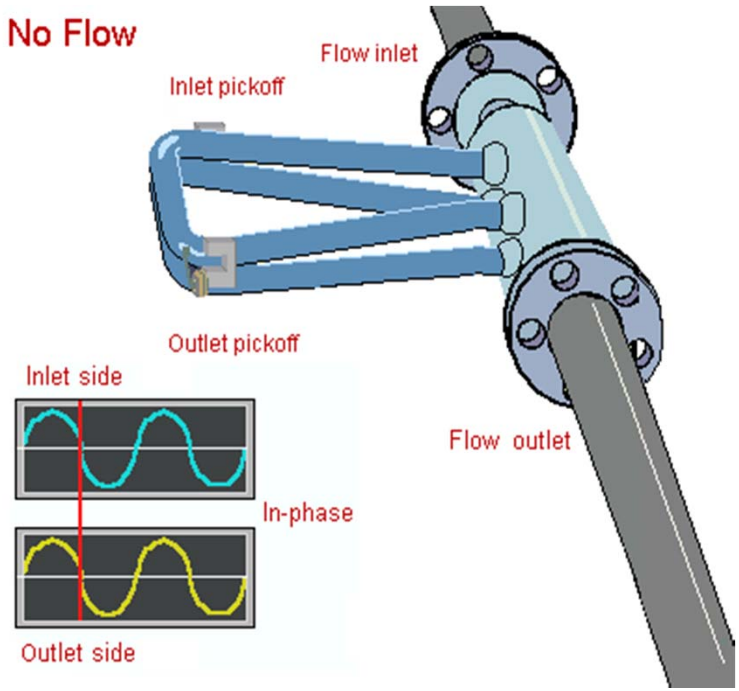


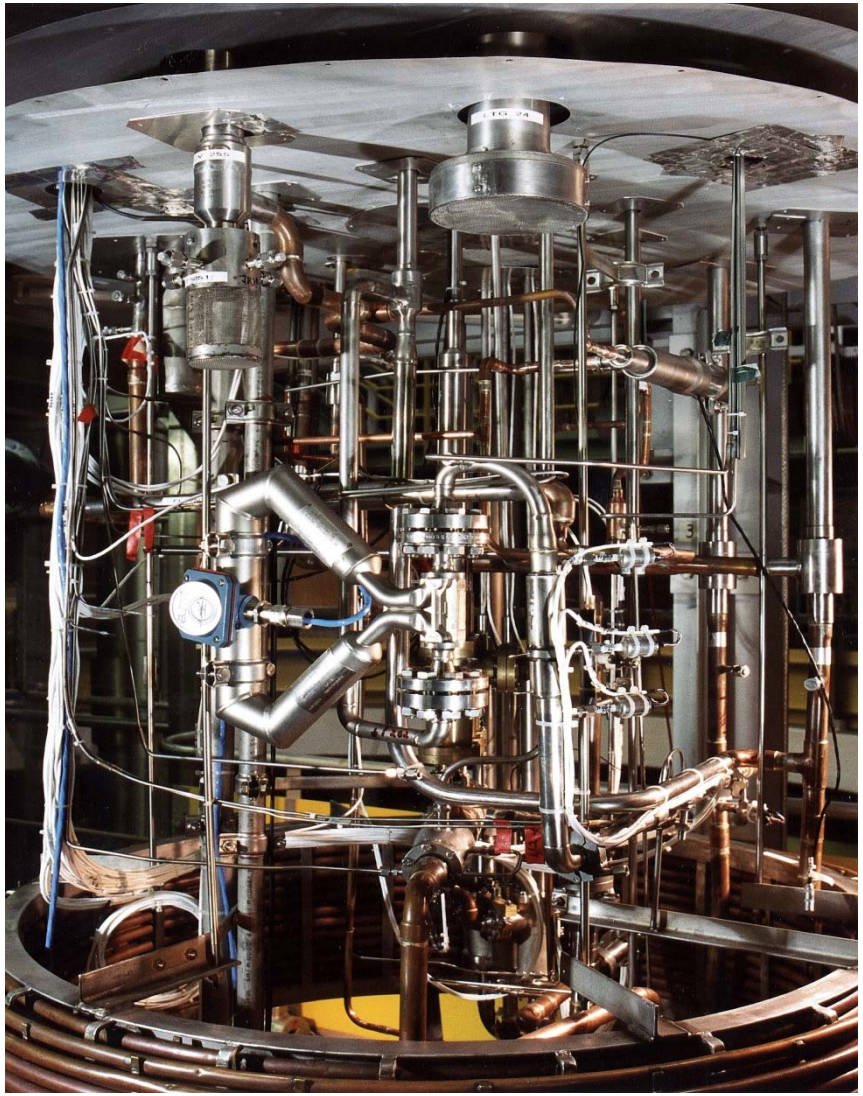

- measuring span:1:50
- high pressure loss
  - recommendation: use of devices with higher nominal mass flow to reduce pressure drop

# Mass flow measurement – comparison

| | venturi | orifice | V-cone | coriolis |
|---|---|---|---|---|
| space requirements | in pipe mounting | in pipe mounting | in pipe mounting | additional space |
| straight upstream length | effects of upstream conditions | effects of upstream conditions | effects of upstream conditions | no effects of upstream conditions |
| connections | capillaries | capillaries | capillaries | electr. wiring |
| reliability | very high | very high | very high | no info. |
| investment cost | high | high | high | medium |
| operation cost | less | high | medium | high |
| magnetic field influence | no | no | no | yes |
| dynamic measurements | errors due frequency amplitude | errors due frequency amplitude | errors due frequency amplitude | depending on frequency |
| uncertainty | 5% | 5% | 5% | 2% |
| pressure overload | high | high | high | medium |

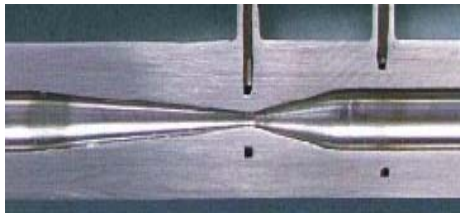

# Level measurement – continuosly

## superconducting wire level device

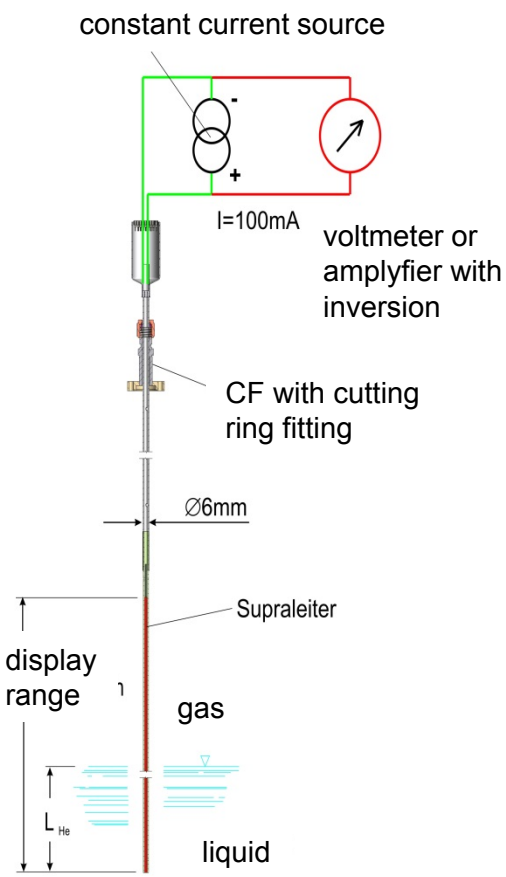


The active element of the probe is a Niobium-Titanium (NbTi) wire, superconductivity transition temperature is above the boiling point of liquid helium.
NbTi-wire enclosed in a perforated protection tube (different diameters and materials available)

Current in the range of ~100 mA. At the start of measurement the probe is excited by a boost current (~200 mA)

The voltage drop across the probe is a function of the depth of immersion.

The selection of the boost current and the measuring current is a very tricky affair as large helium losses can occur if high current is left on continuously

Useful:
Sample and Hold-Function to reduce losses.
Sensor burnout protection during operation in vacuum necessary.

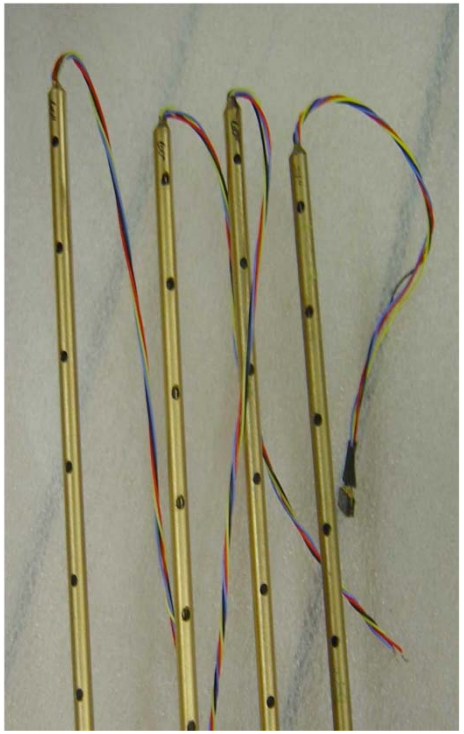

Heat losses:

Probe length 1m, i = 0,1A immersed in LHe 10 %,
Resistance of probe ~500 Ω
$P_L = 0{,}1^2 \times 500 = 5$ W

# Level measurement – continuosly

## Capacitive probe

Recommended for $LN_2$, $LH_2$

$(\varepsilon_L / \varepsilon_G)_{N2} = 1.43$

$(\varepsilon_L / \varepsilon_G)_{Ne} = 1.19$

$(\varepsilon_L / \varepsilon_G)_{H2} = 1.40$

But not recommended for LHe

$(\varepsilon_L / \varepsilon_G)_{He} = 1.04$

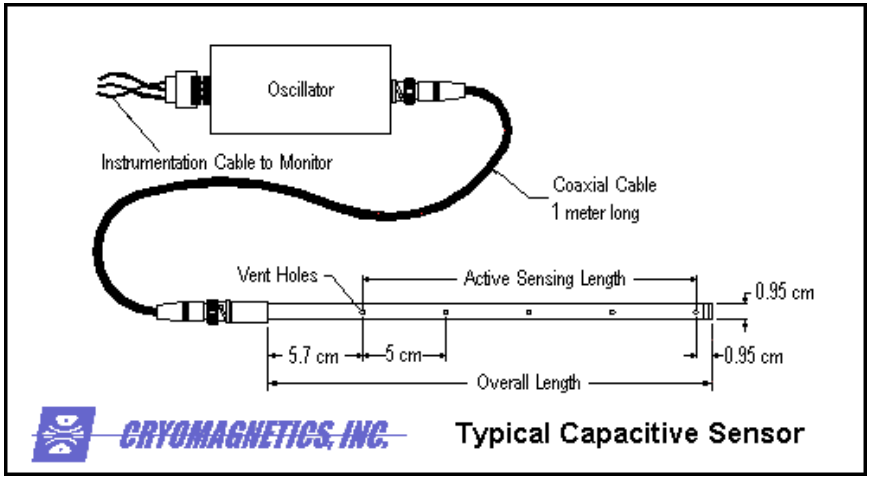


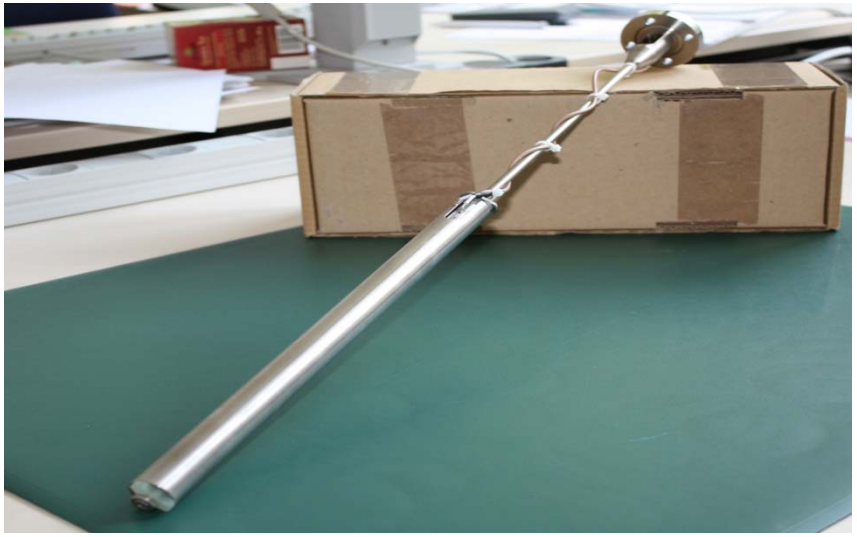

Big influence of parasitic capacitance of the wiring

Usefull is compensation of the wiring capacity

Homemade sensor with transcuder from VEGA-Company

# Level measurement – discrete

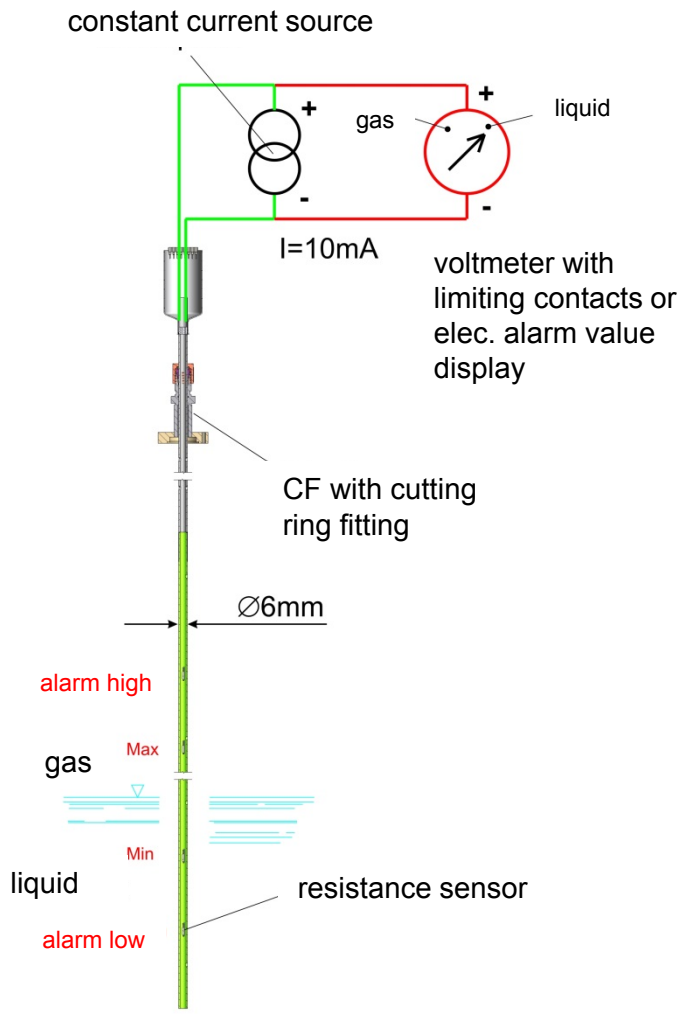


using Pt100 or TVO-sensors

Operation current must be sufficient to self heat the sensor in vapor but not in liquid . Operation current in the range of some mA.

Sensors should be small to minimize heat generation in liquid.

High overload capability of the sensor necessary

# Cryogenic valves

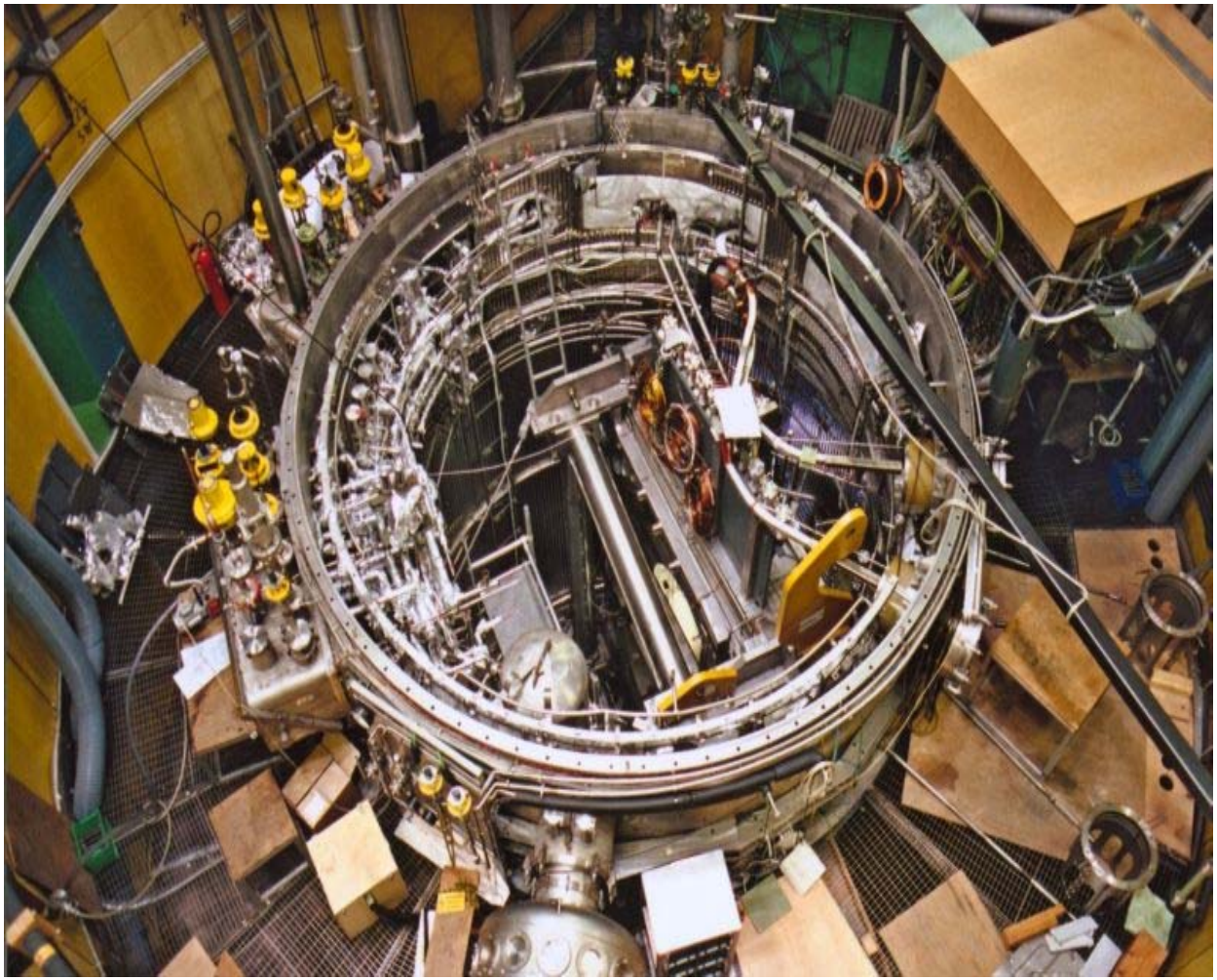

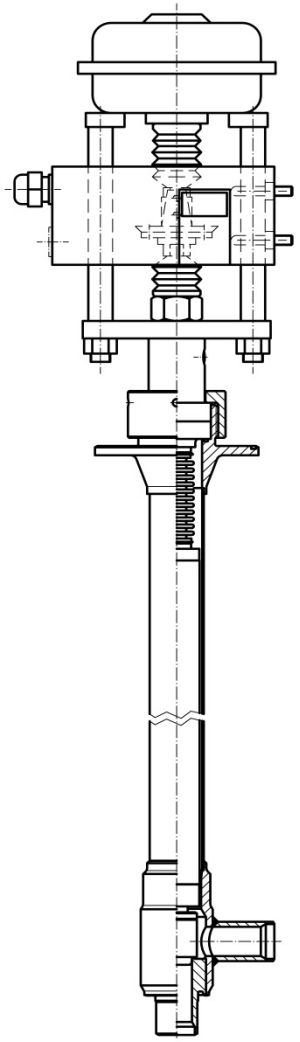

[6]

# Cryogenic valves – specification

- valve size diameter nominale DN
- pressure nominal  PN
- control – shutoff valve
- normally closed or open
- $K_v$ ($C_v$) – value
- plug in profile:  linear, equal percentage or others
- cryogenic length
- Cu thermal flange to contact the thermal shield
- valve actuator manual, pneumatic or electrical
- fail function in case off loss energy supply
- leak tightness over the seat or to the atmosphere
- switches to indicate the position

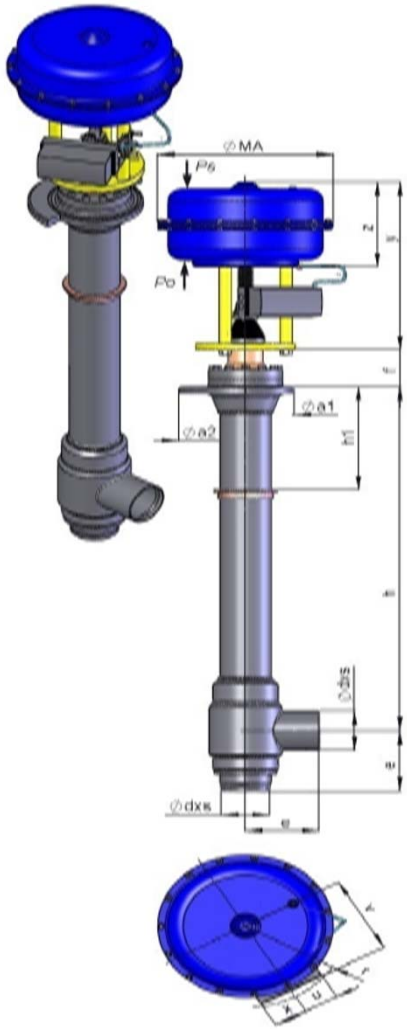


[6]

# Cryogenic valves – valve characteristic

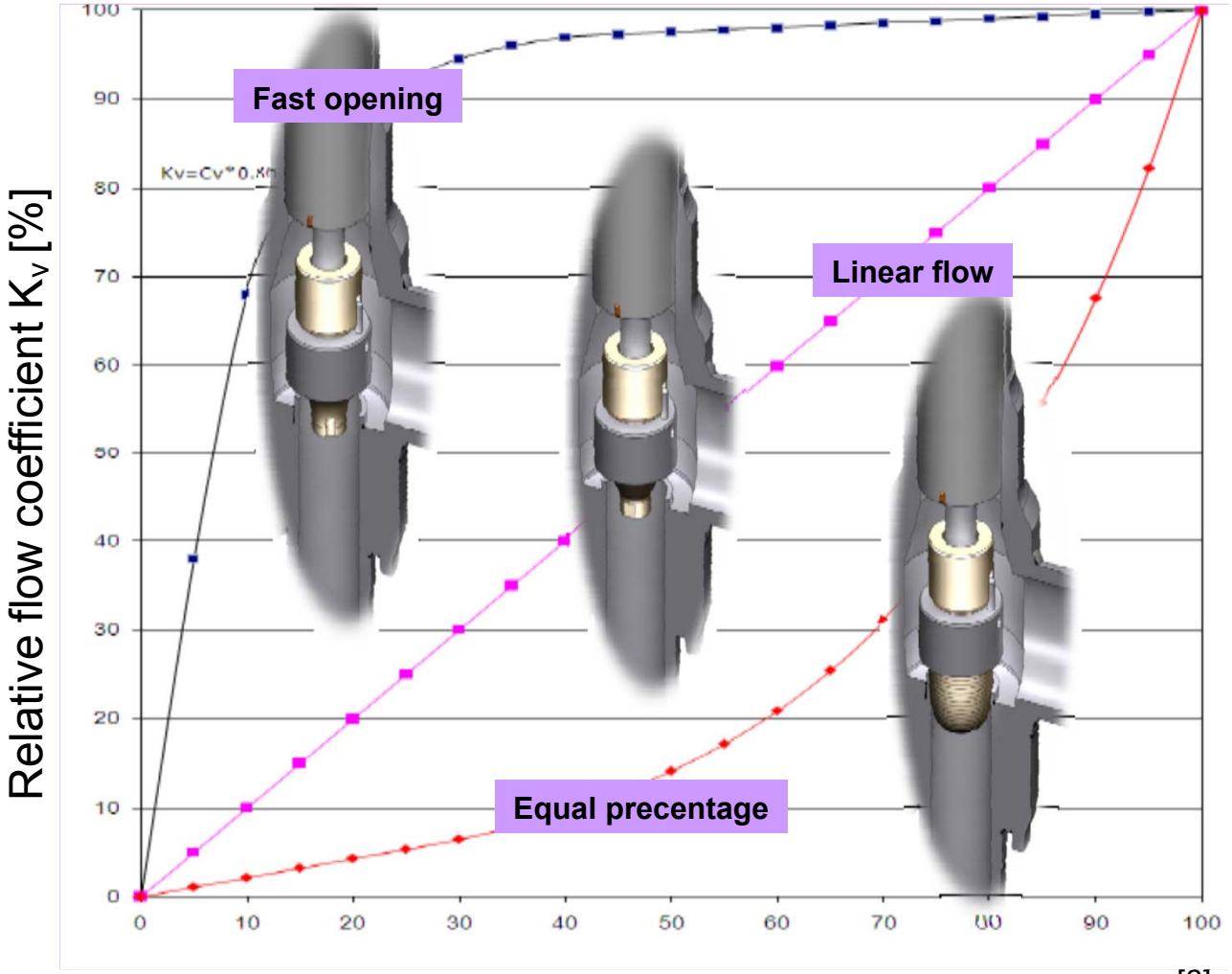


[6]

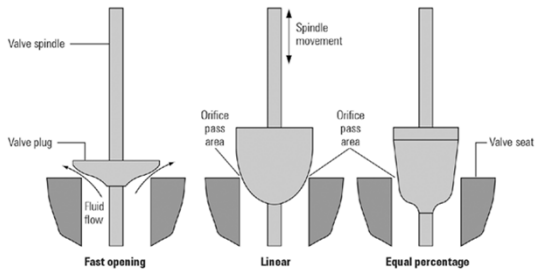

# Cryogenic valves – valve sizing coefficient

Digital (on/off)

Linear flow (linear)

Equal percentage (= %)

$K_v = 0.865 \cdot C_v$

**Interest for control system**

$K_v$ ($C_v$) is a valve sizing coefficient determined experimentally

**$K_V$ – value** is a valve sizing coefficient determined experimentally for each style indication of how many water m³/h under the differential pressure of 1 bar at room temperature will flow through the valve at the respective flow

$$K_V = \dot{V} \cdot \sqrt{\frac{1}{\Delta p_V} \cdot \frac{\rho}{\rho_0}}$$

**$K_{VS}$ –value** Indication of how many water m³/h under the differential pressure of 1 bar at room temperature will flow through the valve at the respective flow at 100 % stroke

**$K_{VR}$-value** Smallest flow coefficient at with the gradient tolerance is still complied with

**Range ability $S_R = K_{vs} / K_{vR}$** : The range of the largest to the smallest coefficient within witch the deviation from the specified flow characteristics does not exceed the limits (common value $S_R = 50$)

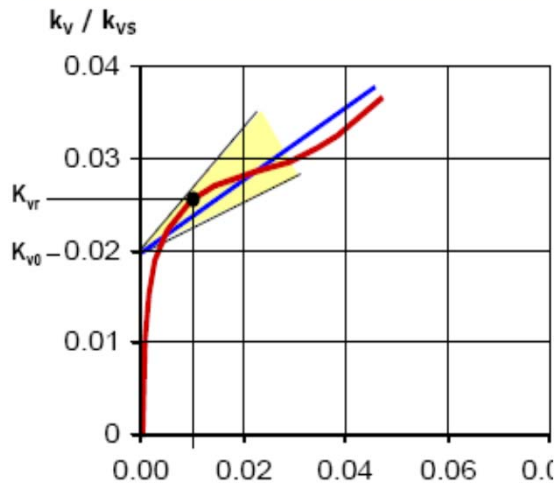

# Thank you for your attention!

# references


[1] S. Scott Courts, W.E. Davenport, D. Scott Holmes, Thermal resistance of cryogenic temperature sensors from 1 – 300K Advances in Cryogenic Engineering, Volume 45

[2] http://www.lakeshore.com/Pages/Home.aspx

[3] C.Balle, J.Casas Industrail-type cryogenic thermometer with built-in heat interception, Proc. CEC1995

[4] T. von Hofmann, U. Lienert, H. Quack: *Experiments on thermally driven gas oscillations*, Cryogenics 13 (1973)

[5] F. Haug, A. McIntruff: *Measurements of pressure transmission in long capillaries*, CEC/ICMC, Los Angeles 1989

[6] pictures of cryo valves by weka: http://www.weka-ag.ch/de/kryoventile