PRESLHY

Work Package 3 / Release & Mixing

Kick-Off Meeting, 17-20 April 2018, Karlsruhe

Alexandros Venetsanos (NCSRD)

Pre-normative REsearch for Safe use of Liquid HYdrogen

WP3 / Objectives

- Close knowledge gaps, develop and validate suitable models for phenomena relevant to release and mixing of LH2. Develop empirical and semi-empirical correlations when applicable. The phenomena include, but are not limited to:
  - Flashing multiphase, multicomponent release phenomena
  - Mass and heat transfer including phase transition (evaporation, condensation and freezing of contaminants) in pools, plumes, jets and sprays
  - Free cryogenic jet principle structure, morphology and behaviour in realistic conditions including flammable envelope
  - Heat transfer effect on hydrogen concentration in impinging and/or wall attached jets
  - Effect of wind speed and direction on large-scale LH2 releases
  - Release and dispersion in confined and obstructed spaces, including pressure-peaking phenomena

WP3 / Overview

- Partners and PMs

NCSRD	KIT	PS	AL	HSL	INERIS	UU	UWAR	Total
12	2	8	2	9	2	4	3	42

- Tasks
  - 3.1 – Theory and Analysis (NCSRD, all)
  - 3.2 – Simulations (NCSRD, KIT, UU, UWAR, INERIS)
  - 3.3 – Experiments (KIT, PS, HSE, INERIS)

WP3 / Task 3.1 Theory and Analysis

- Task 3.1 – Theory and Analysis
  - Consensus regarding the current knowledge on cryogenic hydrogen release and dispersion (link with WP2)
  - Critical review of state of the art to identify gaps in understanding, modeling and experiments.
  - Propose a clear roadmap for closing the identified gaps: a) experimental program, b) simulations program
  - Strong interaction between modelers and experimentalists will lead to design of better experiments and improved prediction strategies.

WP3 / Task 3.2 – Simulations

- Program outline
  - Validation based on existing experiments
  - Pre-test simulations for new experiments
  - Validation based on new experiments
  - Simulations of realistic complex scenarios
- General requirements
  - Program to be fine tuned through task 3.1
  - Inter-comparison between partners' simulations
  - Follow SUSANA project CFD guidelines
  - Simulations both for release and dispersion
- CFD software / Modeling focus
  - ADREA-HF (NCSRD) / pool modeling, explicit vaporization modeling
  - GASFLOW (KIT) / pool modeling
  - ANSYS-Fluent (UU) / conjugate heat transfer during release
  - HyFoam (UWAR) / HRM model for release and pool modeling

WP3 / Task 3.3 – Experiments

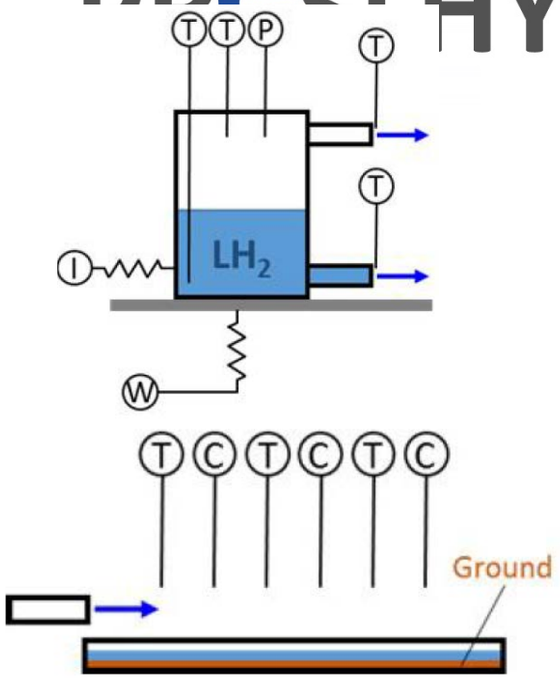

- Active experimental program
  - E3.1 Small scale multiphase release experiments (KIT,PS)
  - E3.4 LH2 pool experiments (KIT,PS)
  - E3.5 Rainout experiments (HSL)
- Experiments in Reserve
  - *E3.2 Multiphase high pressure release experiments*
  - *E3.3 Mid-scale multi-phase release experiments*
- Requirements
  - Program to be fine tuned through task 3.1
  - Focus on minimization of experimental uncertainty due to ambient conditions variability and inadequate knowledge of conditions at the release nozzle.
  - Strong interaction between modelers and experimentalists to design of better experiments

WP3 Experimental matrix

WP3/ Exp. Nr.	Phenomena/ Name	Issue addressed/ Objective	To be investigated	Variation of	Range of variables	n of variations	Partner/ Test facility
E3.1	**Small Scale Multi-phase Release**	Discharge Coefficients of Pressurized or LH2 Releases	pressure changes in bulk vessel temperature changes in a jet mass flow rate inertia (thrust), weight	Initial pressure	0-200 bar (sub-critical & supercritical)	4	KIT/ HYKA-H8(He) DISCHA-facility in Test chamber V = 2.867 dm³
			BOS images, laser diagnostics of jet principle structure, potential wall attachment/ impingement	Initial temperature	25-200K	4	
				Nozzle shape and cross-sectional area		4	
				Extraction point (high/gaseous-low/liquid & middle)		3	
E3.4	**Pool of LH2**	Evaporation a spill of LH2	evaporation rate, cold gas mixing, O2 entrainment	Material of the ground	solid-liquid-porous	3	KIT/ HYKA-H110(N2)
		1 m2	BOS imaging	Initial temperature	77-300K	3	
			temperature profile in a gas				
			concentr. profile in a gas				
E3.5	**Rainout Tests**	LH2 Spray evaporation/ Pool formation	evaporation rate, pool formation		release height	3	HSL/ Pool facility
					release up/down/horizont.	3	

WP3 / Experiments in reserve

WP/ Exp. Nr.	Phenomena/ Name	Issue addressed/ Objective	To be investigated	Variation of	Range of variables	n of variations	Partner/ Test facility
E3.2	Multi-phase High Pressure Release	Charcterisation of Pressurised LH2 releasesusing characteristic pipe diameters		Pressure, temperature, release type (length and diameter, orientation, thrust, discharge coefficent	0-1000 bar? (or highest pressure possible)	t.b.d.	HSL/ Suitable vessel required/system required
		Scale up of E3.1 wrt inventory, release rates & p					
E3.3	Mid-Scale Multi-phase Release	LH2 jets/near field cloud dispersion	flash rate, momentum, velocity (Temperature pressure and concentration measurements in the near field from 0 to 1m), Cloud dispersion : temperature et concentration measurements (field instrumentation ~10 m)	orifice size , pressure	5/15 mm ; 0-10bar	3 x 3	INERIS/ 2 m3 vessel + 20 m line (1"ID)+discharge valve+calibrated orifice
		1 m2	BOS imaging	Initial temperature	77-300K	3	
			temperature profile in a gas				
			concentr. profile in a gas				

WP3 / Simulations matrix

Experiment	Phenomena	INERIS	KIT	NCSRD	UU	UWAR
NASA (1980)	Dispersion, pool spreading			√		
BAM (1994)	Dispersion, pool spreading, effect of obstacles					
HSL (2010)	Two-phase jets dispersion					
INERIS (1995)	He dispersion, pool spreading	√*		√		
PRESLHY E3.1	Small discharge		√	√	√	√
PRESLHY E3.4	Pool dispersion		√	√		√
PRESLHY E3.5	Rainout		√	√		√

* INERIS will share the experiments with PRESLHY and develop engineering model based on correlations

WP3 / Planning

PRESLHY WP3 Release and Mixing		Leader	Month																																			
Task			1	2	3	4	5	6	7	8	9	10	11	12	13	14	15	16	17	18	19	20	21	22	23	24	25	26	27	28	29	30	31	32	33	34	35	36
3.1	Theory and Analysis	NCSRD																		D3.1																		
3.2	Simulations	NCSRD																																			D3.2	
3.3	Experiments	KIT																																			D3.3	
E3.1	Small Discharge	KIT/PS				S				E		D3.4																										
E3.4	Pool Dispersion	KIT/PS											S					E			D3.5																	
E3.5	Rainout	HSE													S						E			D3.6														

WP3 / Deliverables

- D3.1 Theory and Analysis of cryogenic hydrogen release and dispersion (PU, M18), Leader NCSRD, partners all.
- D3.2 Computational investigation of cryogenic hydrogen release and dispersion (PU, month 36), Leader NCSRD, partners all.
- D3.3 Experimental investigation of cryogenic hydrogen release and dispersion (PU, M36), Leader KIT, partners all.
- D3.4 Summary of experiment series E3.1 results (CO, M11), PS
- D3.5 Summary of experiment series E3.4 results (CO, M19), PS
- D3.6 Summary of experiment series E3.5 results (CO, M22), HSL

Ευχαριστώ
Thank You
Merci
Danke
Gracias